Aquababy24

FX Type: **Delay**
Build Level: Intermediate
Based On: Boss® DM-2™

Last Updated: November 22, 2024 1:58 PM
© 2024 madbeanpedals

The *2024 version* of the **Aquababy** has no circuit changes and some minor layout adjustments. The PCB has been converted from a 2-layer to 4-layer design for low noise operation and the project now offers a PCB mounted pot option.

Overview

The Aquababy is a faithful clone of the Boss® DM-2™ analog delay. It offers up to 300ms of analog delay in a 1590B enclosure. The Aquababy is designed to utilize different BBD types (MN3205 or MN3005) and clocks depending on availability and price. Minimal modifications are required to set the build up for these different BBDs, and this will be explained in detail later on in this document.

Controls

- **MIX**: The ratio of delay vs. clean signal.
- **FDBK**: The number of delay repeats. Maximum FDBK setting will induce self-oscillation.
- **DELAY**: Delay time from slap-back to about 300ms.
- **BIAS**: Used to set the proper bias on the input of the MN3x05 for it to produce clean delay.
- **CANCEL***:* Sets the mix of the two delay outputs on the MN3x05.
- **CLOCK**: Sets the correct clock frequency range produced by the MN310x to drive the BBD delay lines in the MN3x05.

Terms of Use: *You are free to use purchased **Aquababy24** circuit boards for both DIY and small commercial operations. You may not offer **Aquababy24** PCBs for resale or as part of a "kit" in a commercial fashion. Peer to peer re-sale is fine, though.*

Technical assistance for is available via the madbeanpedals forum. Please go there rather than emailing me for personal assistance. This is because (1) I'm not always available to respond via email in a timely and continuous manner, and (2) posting technical problems and solutions in the forum creates a record from which other members may benefit.

All copyrights and registered trademarks are property of their original owners. Any mention of trademarked or intellectual properties in this documents is purely for comparative purposes.

Parts Layout

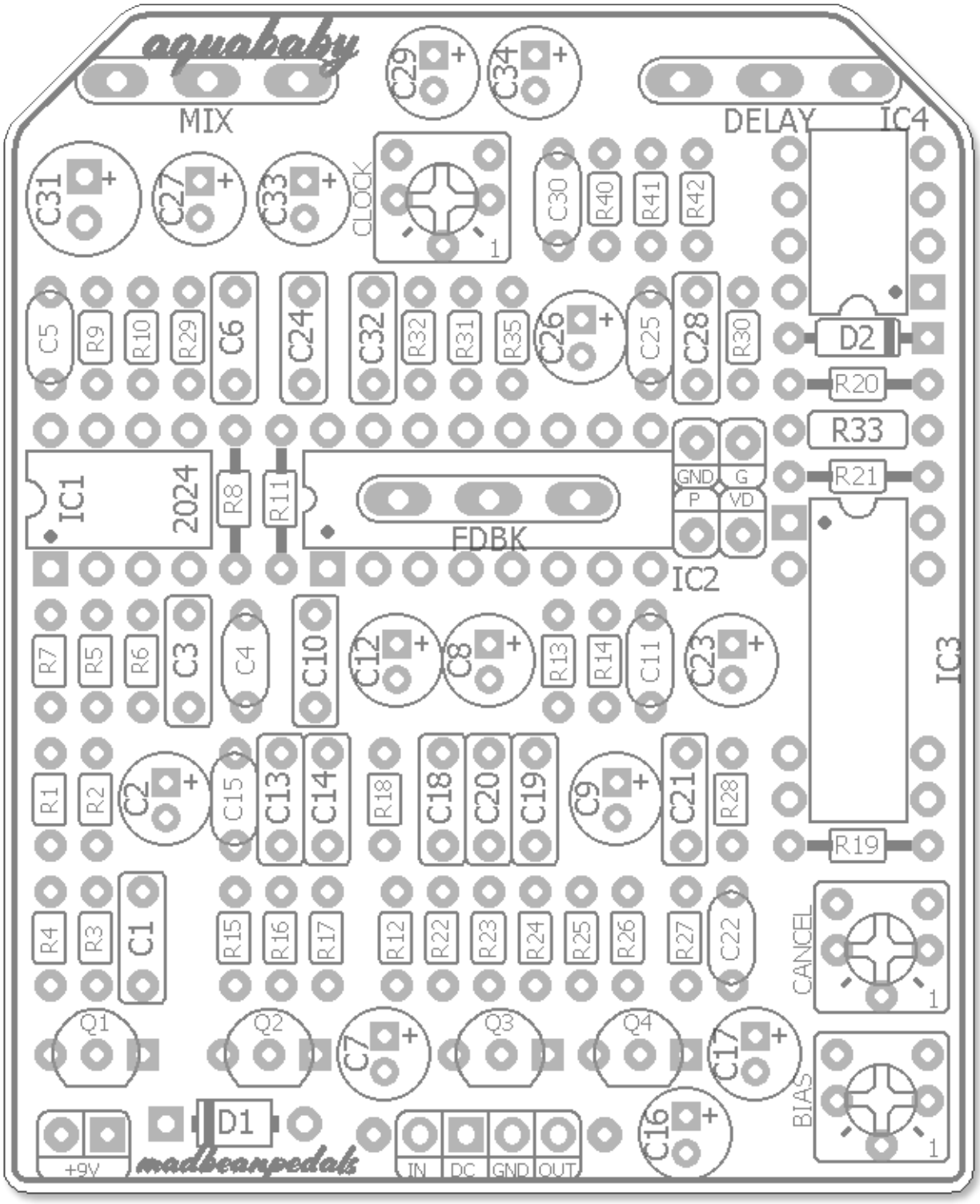

Component Values

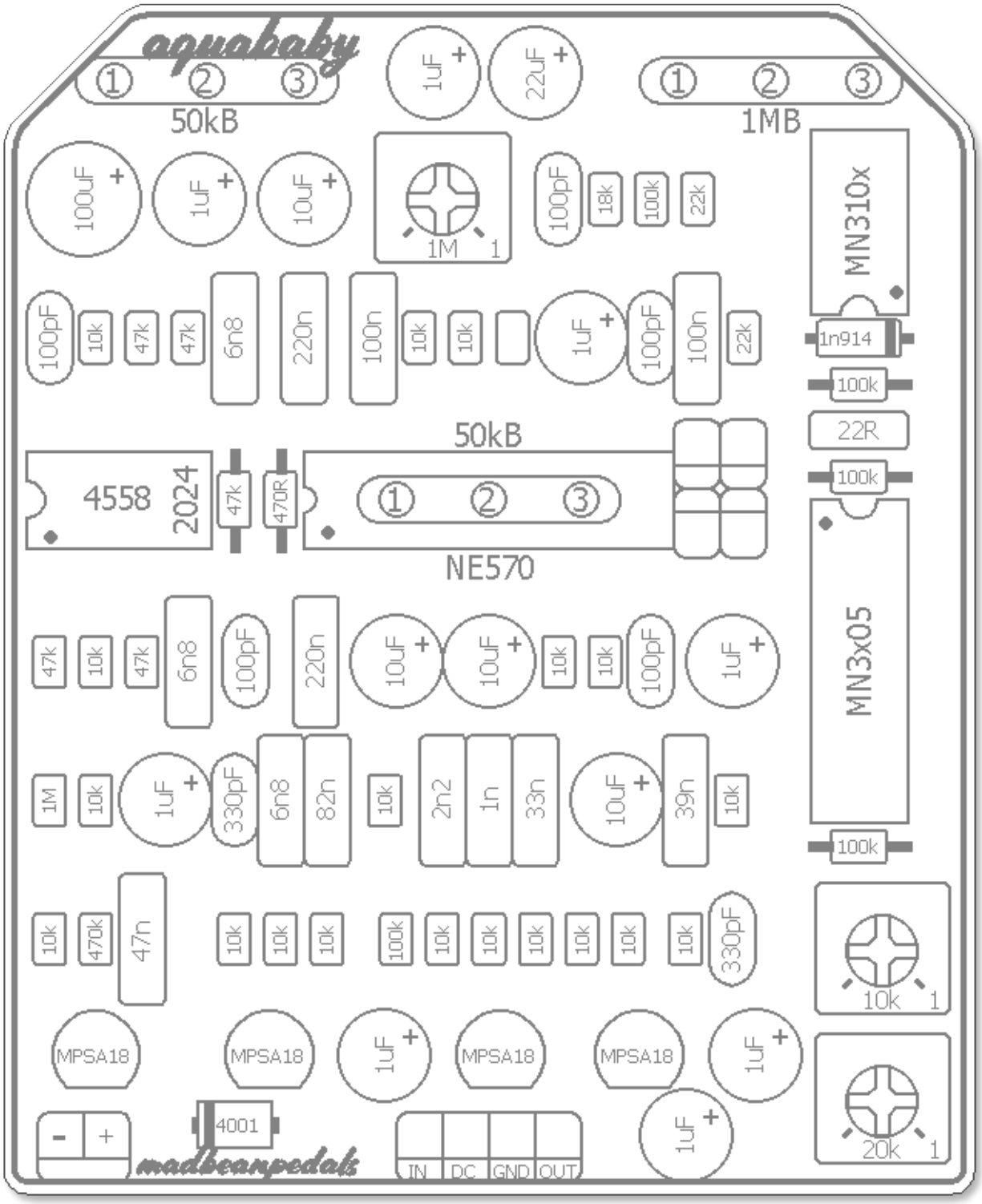

Trace Layout - Outer Layers

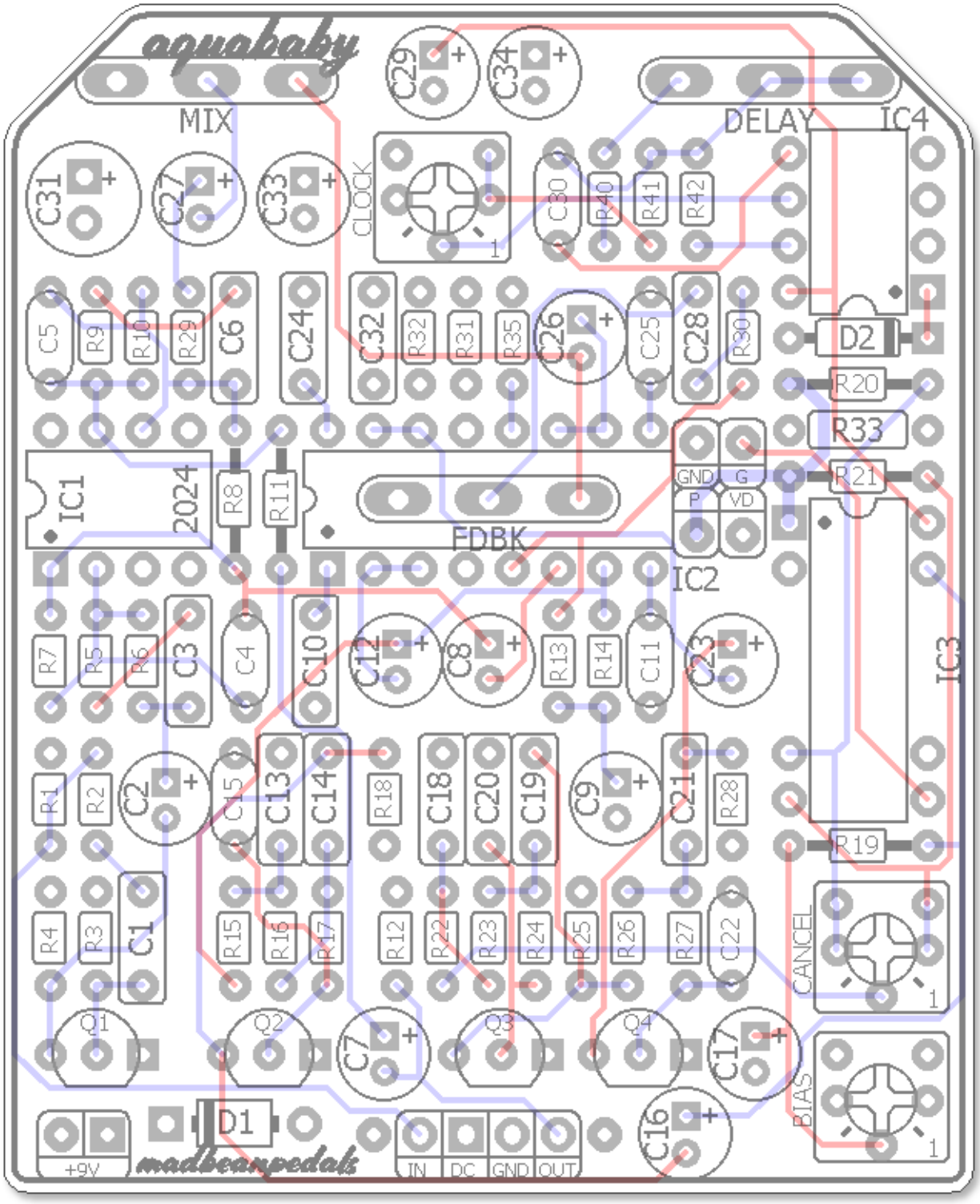

Trace Layout - Inner Layers

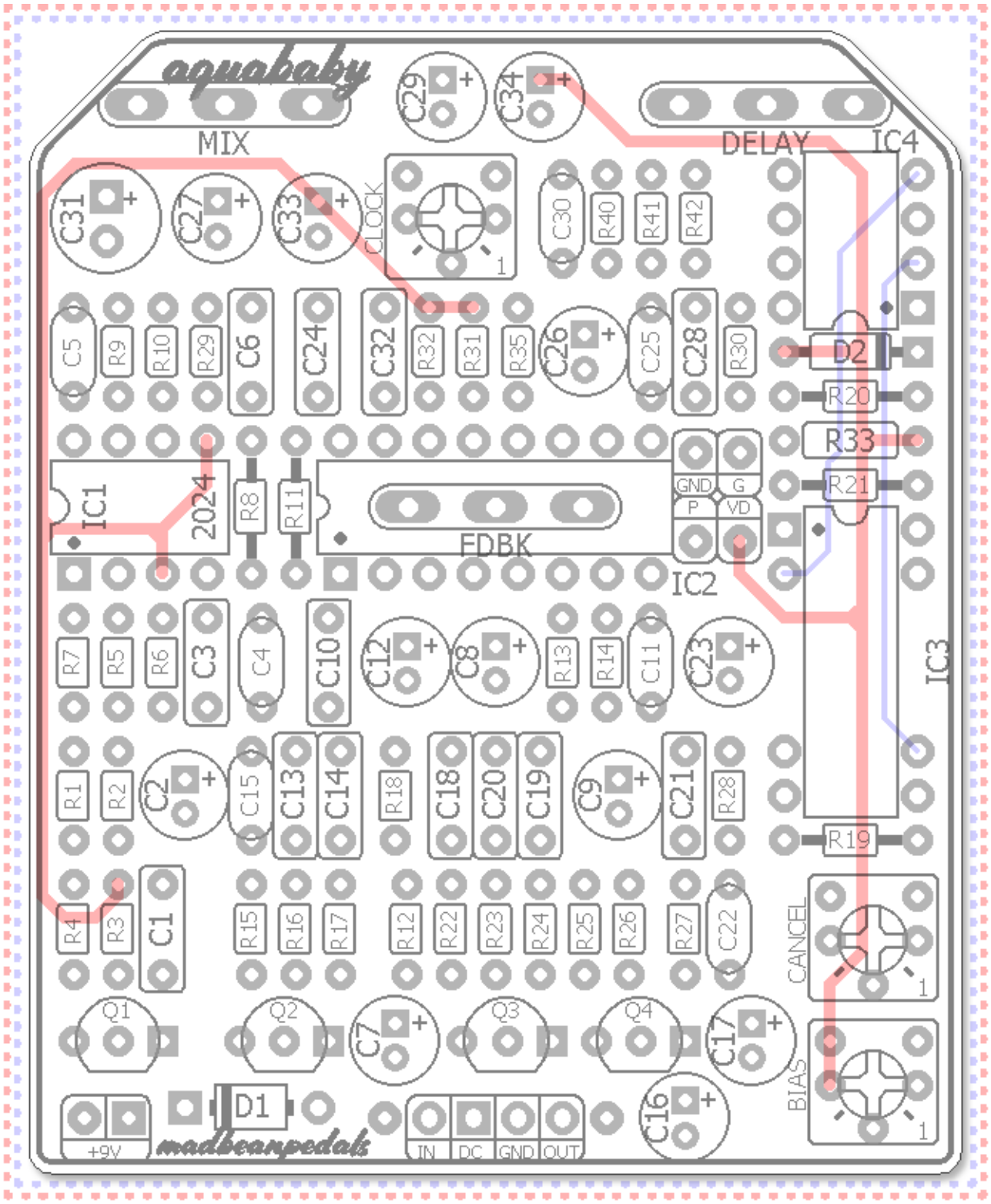

Wiring

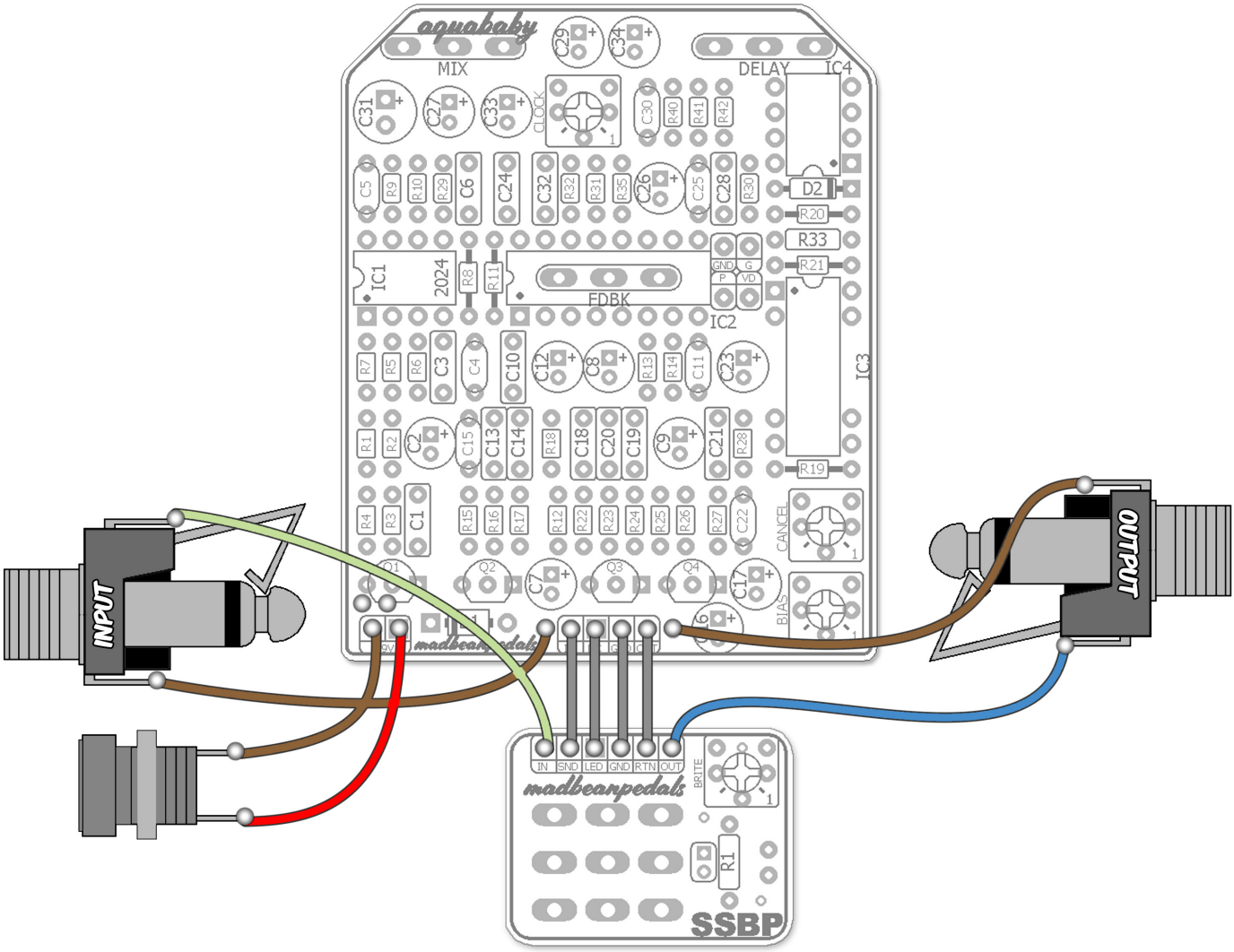

The Aquababy24 is compatible with the **SSBP** bypass board available at madbeanpedals.

B.O.M.

Resistors		Caps		Diodes	
R1	1M	C1	47n	D1	1N4001
R2	10k	C2	1uF	D2	1n914
R3	470k	C3	6n8	**Transistors**	
R4	10k	C4	100pF	Q1	MPSA18
R5	10k	C5	100pF	Q2	MPSA18
R6	47k	C6	6n8	Q3	MPSA18
R7	47k	C7	1uF	Q4	MPSA18
R8	47k	C8	10uF	**IC**	
R9	10k	C9	10uF	IC1	4558
R10	47k	C10	220n	IC2	NE570
R11	470R	C11	100pF	IC3	MN3005
R12	100k	C12	10uF	IC4	MN3101
R13	10k	C13	6n8	**Trimmers**	
R14	10k	C14	82n	BIAS	20k
R15	10k	C15	330pF	CANCEL	10k
R16	10k	C16	1uF	CLOCK	1M
R17	10k	C17	1uF	**Pots**	
R18	10k	C18	2n2	DELAY	1MB
R19	100k	C19	33n	FDBK	50kB
R20	100k	C20	1n	MIX	50kB
R21	100k	C21	39n		
R22	10k	C22	330pF		
R23	10k	C23	1uF		
R24	10k	C24	220n		
R25	10k	C25	100pF		
R26	10k	C26	1uF		
R27	10k	C27	1uF		
R28	10k	C28	100n		
R29	47k	C29	1uF		
R30	22k	C30	100pF		
R31	10k	C31	100uF		
R32	10k	C32	100n		
R33	22R	C33	10uF		
R35	*see notes	C34	22uF		
R40	18k				
R41	10k				
R42	22k				

Shopping List

Value	QTY	Type	Rating
22R	1	Metal / Carbon Film	1/4W
470R	1	Metal / Carbon Film	1/8W
10k	20	Metal / Carbon Film	1/8W
18k	1	Metal / Carbon Film	1/8W
22k	2	Metal / Carbon Film	1/8W
47k	5	Metal / Carbon Film	1/8W
100k	4	Metal / Carbon Film	1/8W
470k	1	Metal / Carbon Film	1/8W
1M	1	Metal / Carbon Film	1/8W
100pF	5	Ceramic / MLCC	25v min
330pF	2	Ceramic / MLCC	25v min
1n	1	Film	25v min
2n2	1	Film	25v min
6n8	3	Film	25v min
33n	1	Film	25v min
39n	1	Film	25v min
47n	1	Film	25v min
82n	1	Film	25v min
100n	2	Film	25v min
220n	2	Film	25v min
1uF	1	Film	25v min
1uF	7	Electrolytic	25v min
10uF	4	Electrolytic	25v min
22uF	1	Electrolytic	25v min
100uF	1	Electrolytic	25v min
1N4001	1		
1n914	1		
MPSA18	4	or, other BJT	
4558	1		
NE570	1		
MN3005	1		
MN3101	1		
20k	1	Bourns 3362p or 6mm	
10k	1	Bourns 3362p or 6mm	
1M	1	Bourns 3362p or 6mm	
1MB	1	PCB Right Angle	16mm
50kB	2	PCB Right Angle	16mm

Additional Hardware

(1) 1590B enclosure
(2) 1/4” mono jacks
(1) Slim 2.1mm DC jack
(1) Standard 3PDT footswitch
(1) 5mm LED

Build Notes

You can build the Aquababy with the following BBDs: MN3005, MN3205 or v3205. The MN3005 requires an MN3101 clock. The MN3205 and v3205 require either the MN3102 or v3102 clock.

You will need to solder in two jumpers according to which BBD type you use.

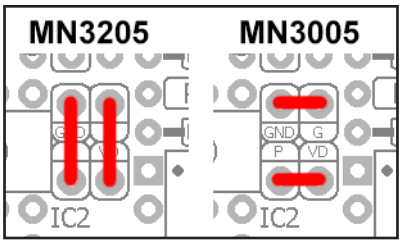

Note #1: The v3205 is reported to have a max voltage range of 8v (the MN3205 is usually a little over 9v). If you use the v3205 change R33 from 22R to 1k5 to limit the voltage.

For the Compander (IC2) you can use the NE570, SA571 or v571. They are interchangeable.

Note #2: The FDBK pins go between the socket used for IC2. When populating the pots on the PCB, solder the FDBK pins from the bottom side.

Note #2: R35 is not present in the DM-2. Using a resistor here will raise the output voltage on pins 10&11 for a little more headroom. However, you may need to increase the R20 to offset that increased output. Suggested values for R35 are 18-27k.

Calibration

Make the following adjustments before beginning:

- *Mix control at center.*
- *Delay at full CW.*
- *FDBK at about 1/3 up.*
- *BIAS and Cancel trimpots to their center position.*
- *If you have frequency measurement on your DMM, adjust the Clock trimmer to about 6.5kHz while probing either pin2 or pin4 of IC4. If you don't have this feature set the Clock trim half-way up (note: this is when using a 9v supply).*

Audio probe pin3 of IC3 while either strumming the guitar or send some audio through the input of the circuit. Adjust the BIAS trimmer until you get delay passing. The range over which the trimmer will result in delay is usually about 1/4 to 1/6 of its entire rotation. Continue refining the position of BIAS until you get the smallest amount of distortion on the delay signal. Now probe pin4 of IC3 to confirm it is also passing delay. If it does not, make sure that you have clock frequency on both pins 2 and 6.

Now finely adjust the CLOCK trimmer until just before you hear any high pitch whine or aliasing in the audio path. This is the maximum delay setting. The clock frequency should land somewhere between 6 and 7 kHz but in some cases you may be able to go lower (meaning longer delay).

Unless you are using an oscilloscope to calibrate the delay, leave the Cancel trim in the center position.

Circuit Voltages

IC1	4558	IC3	MN3205	Q3	MPSA18
1	4.76	1	0	C	9.48
2	4.75	2	4.42	B	5.67
3	4.75	3	6.05	E	5.38
4	0	4	6.05	Q4	MPSA18
5	4.75	5	9.46	C	9.48
6	4.75	6	4.42	B	5.41
7	4.74	7	5.07	E	4.77
8	9.48	8	8.3		
IC2	NE571	IC4	MN3102		
1	1.47	1	3.68		
2	1.84	2	5.18		
3	1.84	3	4.92		
4	0	4	8.3		
5	1.84	5	8.81		
6	1.83	6	4.42		
7	2.97	7	0		
8	1.84	8	4.4		
9	1.84	Q1	MPSA18		
10	3.04	C	9.48		
11	3.04	B	4.38		
12	1.84	E	3.96		
13	9.48	Q2	MPSA18		
14	1.84	C	9.48		
15	1.84	B	2.95		
16	0.98	E	2.36		

9.5vDC One Spot
Current Draw: ~11mA
Knobs @ 0

These measurements are for the 3205/3102 combo. If you use the 3005/3101, most voltages will remain the same except:

IC3 pins 1 and 5 will swap values and pin8 will be around 0.6V

Drill Template

Coordinates are denoted in (X,Y), drill size format starting from the center (0,0) location of the enclosure.

Tayda drill link: https://drill.taydakits.com/box-designs/new?public_key=RG02RlNoeEN1R2NzWXcxQkpxcHZzQT09Cg==

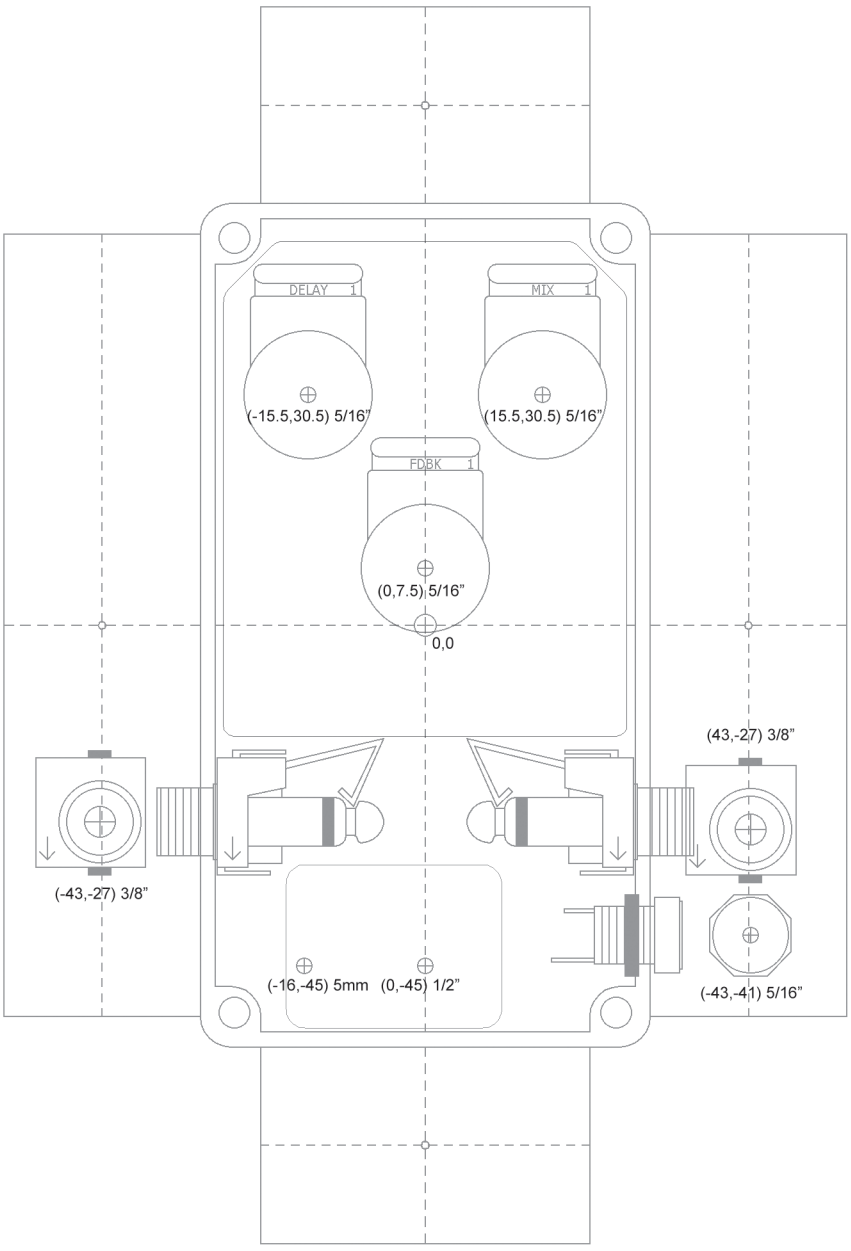

Build Pic

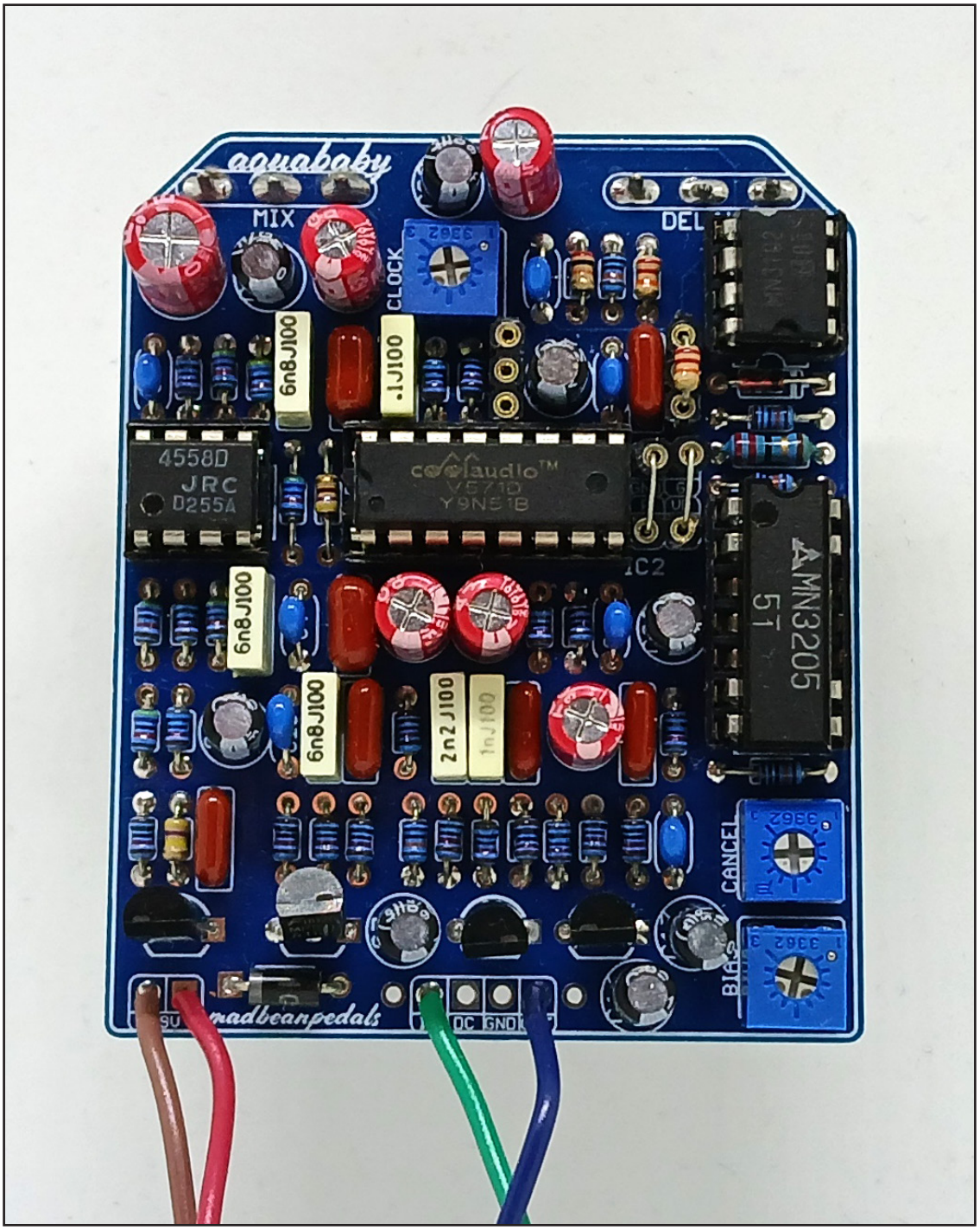
aquababy
MIX
DEL
CLOCK
6n8J100
.1J100
4558D
JRC
D255A
AMN3205
2n2J100
1nJ100
CANCEL
BIAS
madbeanpedals

Schematic

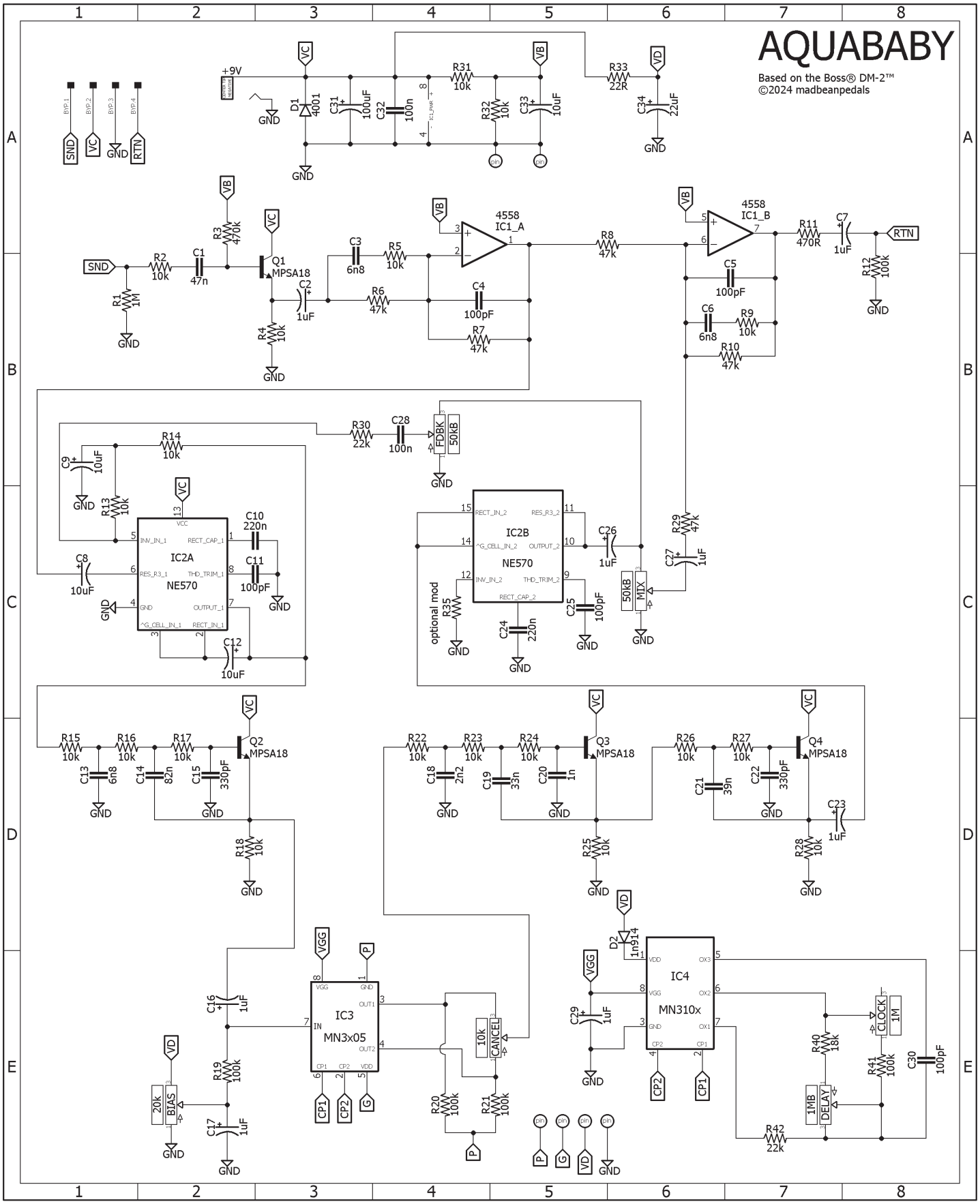
AQUABABY
Based on the Boss® DM-2™
©2024 madbeanpedals
+9V
D1 4001
C31 100uF
C32 100n
R31 10k
R32 10k
C33 10uF
R33 22R
C34 22uF
SND
VC
GND
RTN
R1 1M
R2 10k
C1 47n
R3 470k
Q1 MPSA18
C2 1uF
R4 10k
C3 6n8
R5 10k
R6 47k
C4 100pF
R7 47k
4558 IC1_A
R8 47k
4558 IC1_B
C5 100pF
C6 6n8
R9 10k
R10 47k
R11 470R
C7 1uF
R12 100k
R30 22k
C28 100n
FDBK 50kB
R14 10k
C9 10uF
R13 10k
IC2A NE570
C10 220n
C11 100pF
C8 10uF
C12 10uF
IC2B NE570
C26 1uF
C27 1uF
R29 47k
MIX 50kB
optional mod
R35
C24 220n
C25 100pF
R15 10k
R16 10k
R17 10k
Q2 MPSA18
C13 6n8
C14 82n
C15 330pF
R18 10k
R22 10k
R23 10k
R24 10k
Q3 MPSA18
C18 2n2
C19 33n
C20 1n
R25 10k
R26 10k
R27 10k
Q4 MPSA18
C21 39n
C22 330pF
C23 1uF
R28 10k
D2 1n914
IC3 MN3x05
C16 1uF
R19 100k
C17 1uF
20k BIAS
10k CANCEL
R20 100k
R21 100k
IC4 MN310x
C29 1uF
R40 18k
R41 100k
C30 100pF
CLOCK 1M
1MB DELAY
R42 22k
VGG
P
G
VD
CP1
CP2