Kompromat24

FX Type: **COMPRESSION**
Build Level: Intermediate
Based On: Keeley® Compressor™ and Barber® Tone Press™

Last Updated: August 17, 2024 5:33 PM
© 2024 madbeanpedals

The *2024 version* of the **Kompromat** has no circuit changes and minor layout tweaks.

Overview

The Kompromat takes elements from both the original Keeley® Compressor and Barber® Tone Press™ and combines them into a single hybrid project. These are, in turn, based on the classic Ross OTA compressor. Taking into account the current shortages and decreasing part availability, the Kompromat offers the option to use either the stock CA3080 or the more widely available LM13700 OTA depending on which you have at your disposal. You only need use one of these for the project.

Controls

- **SUS:** Sets the total compression level (and the threshold trigger and compression ratio).
- **ATTACK:** Sets the response time of the compression effect. CCW: fast attack, CW: slow attack.
- **BLEND:** CCW: dry only. CW: compression only. In between will mix the dry and compressed signals.
- **CLIP:** This control reduces the input to the compressor. Set CCW for single coils and turn up for hotter pickups like P-90's or humbuckers to reduce any clipping of the compression.
- **LVL:** Effect output level.
- **BIAS:** Sets the balance of the two OTA inputs. See Notes for adjustment.

Here is an excellent explanation of the Keeley® Compressor:
https://robertkeeley.com/2013/07/manic-compressive/

Terms of Use: *You are free to use purchased **Kompromat24** circuit boards for both DIY and small commercial operations. You may not offer **Kompromat24** PCBs for resale or as part of a "kit" in a commercial fashion. Peer to peer re-sale is fine, though.*

Technical assistance for is available via the madbeanpedals forum. Please go there rather than emailing me for personal assistance. This is because (1) I'm not always available to respond via email in a timely and continuous manner, and (2) posting technical problems and solutions in the forum creates a record from which other members may benefit.

All copyrights and registered trademarks are property of their original owners. Any mention of trademarked or intellectual properties in this documents is purely for comparative purposes.

Parts Layout

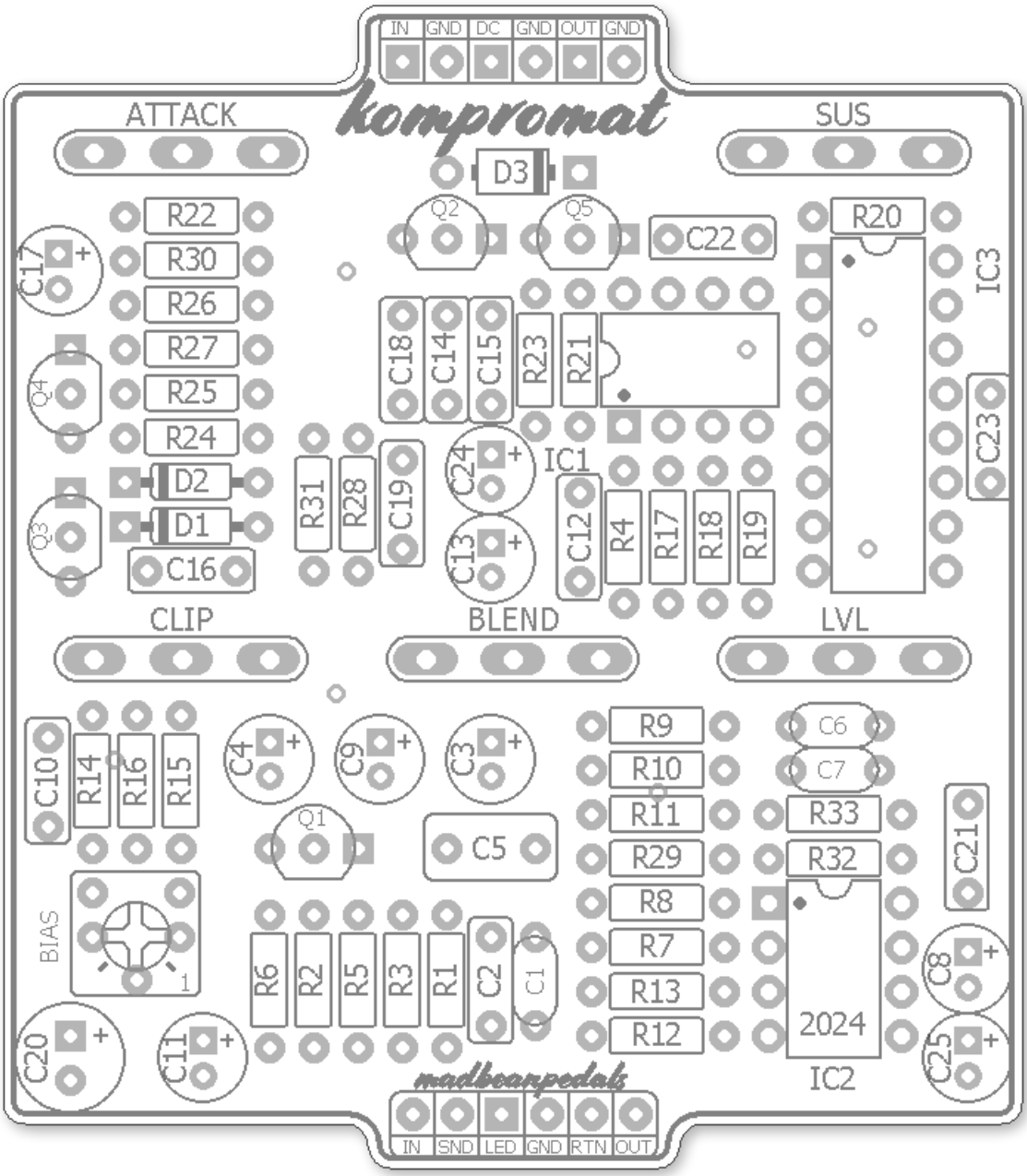

Component Values

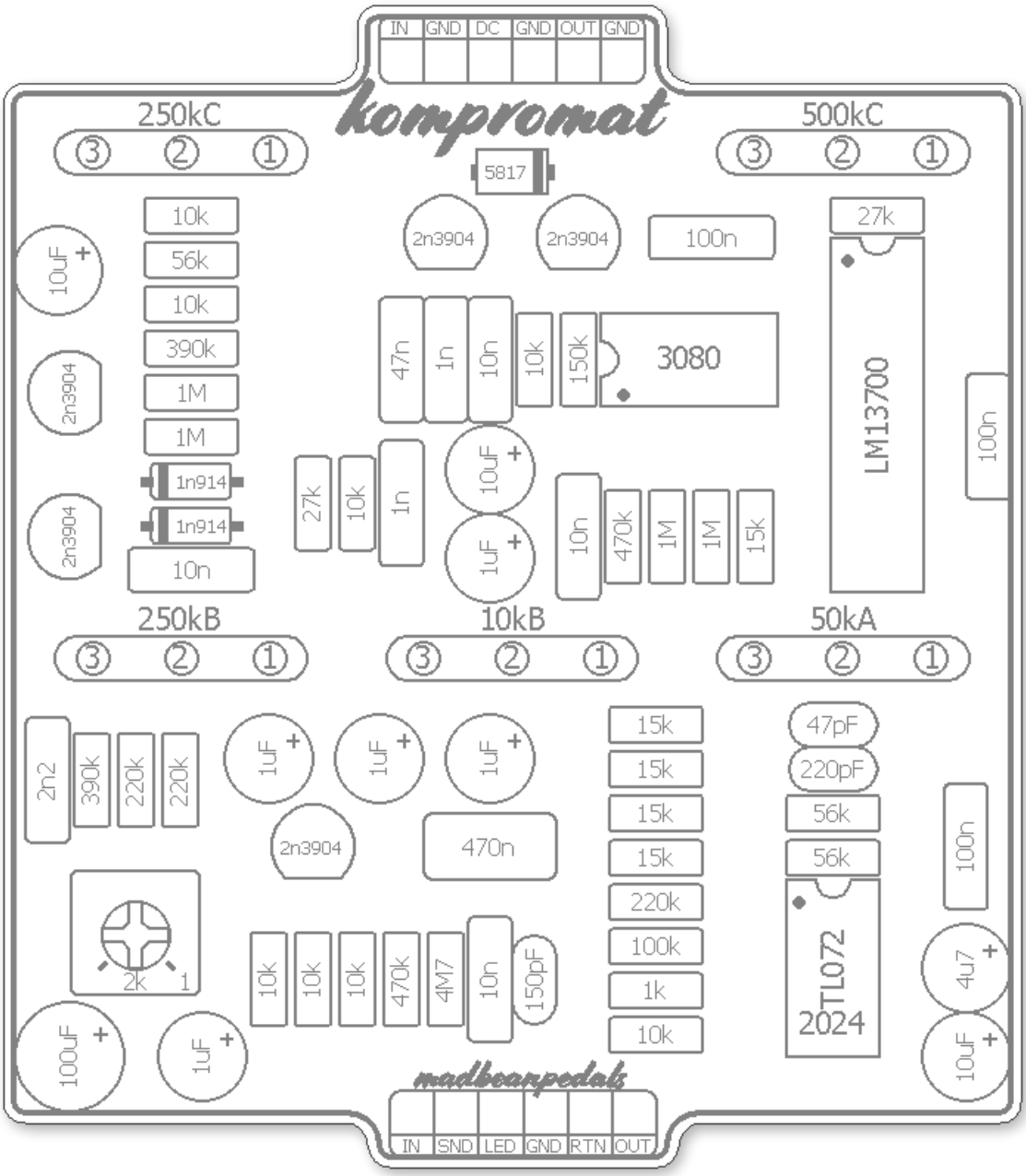

Trace Layout

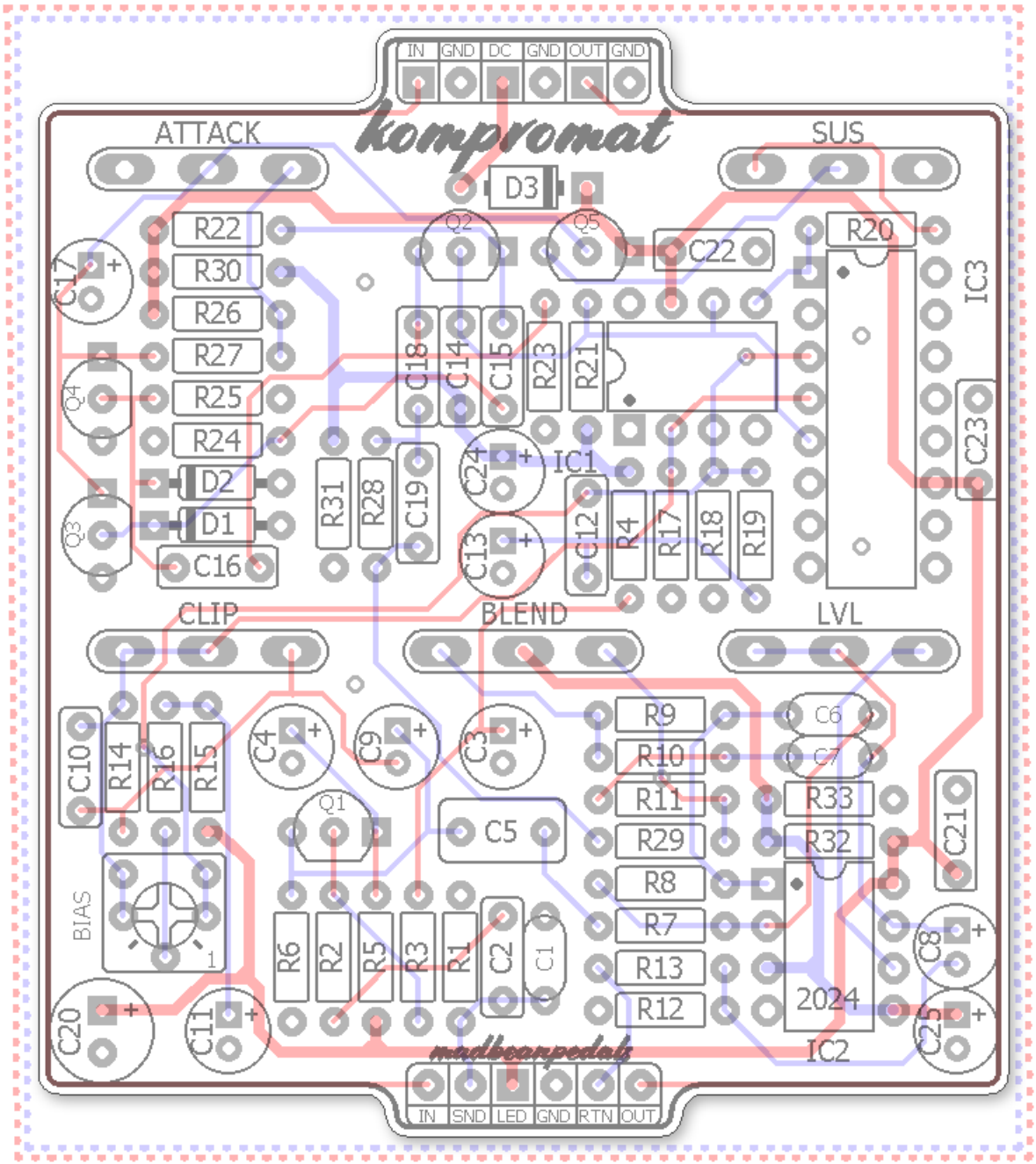

Wiring

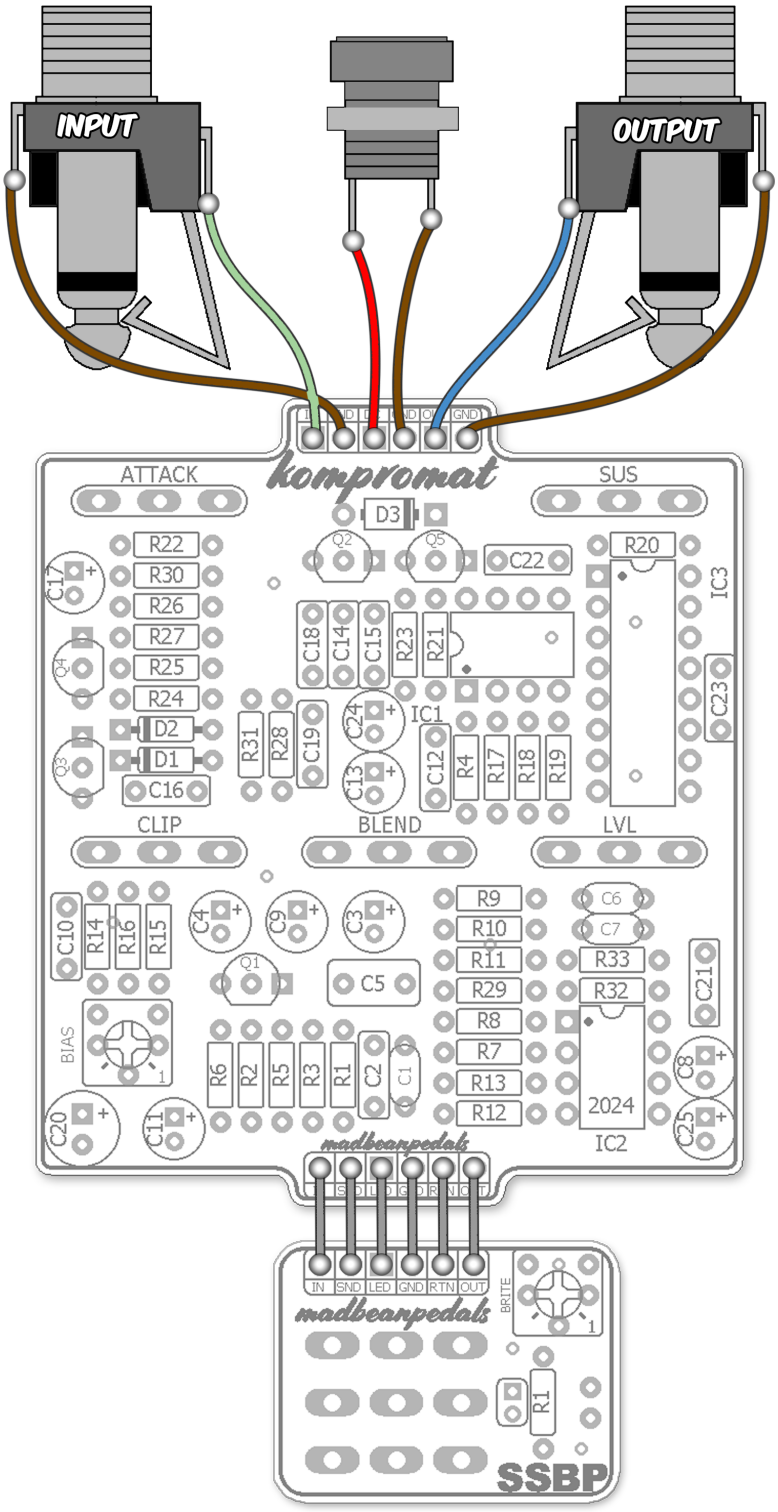

The Kompromat24 is compatible with both the **SSBP** and **SSABP** bypass boards available at madbeanpedals. The wiring is the same for both.

B.O.M.

Resistors		Caps		Diodes	
R1	4M7	C1	150pF	D1	1n914
R2	10k	C2	10n	D2	1n914
R3	470k	C3	1uF	D3	1N5817
R4	470k	C4	1uF	Transistors	
R5	10k	C5	470n	Q1	2n3904
R6	10k	C6	47pF	Q2	2n3904
R7	100k	C7	220pF	Q3	2n3904
R8	220k	C8	4u7	Q4	2n3904
R9	15k	C9	1uF	Q5	2n3904
R10	15k	C10	2n2	ICs	
R11	15k	C11	1uF	IC1	3080
R12	10k	C12	10n	IC2	TL072
R13	1k	C13	1uF	IC3	LM13700
R14	390k	C14	1n	Trimmer	
R15	220k	C15	10n	BIAS	2k
R16	220k	C16	10n	Pots	
R17	1M	C17	10uF	BLEND	10kB
R18	1M	C18	47n	LVL	50kA
R19	15k	C19	1n	CLIP	250kB
R20	27k	C20	100uF	ATTACK	250kC
R21	150k	C21	10uF	SUS	500kC
R22	10k	C22	100n		
R23	10k	C23	100n		
R24	1M	C24	10uF		
R25	1M	C25	10uF		
R26	10k				
R27	390k				
R28	10k				
R29	15k				
R30	56k				
R31	27k				
R32	56k				
R33	56k				

CA3080:
https://smallbear-electronics.mybigcommerce.com/ic-ca3080ae/
https://stompboxparts.com/semiconductors/integrated-circuits-ics/op-amp/ca3080ae-transconductance-amplifier-ic/

Shopping List

Values	QTY	Type	Rating
1k	1	Metal / Carbon Film	1/4W
10k	8	Metal / Carbon Film	1/4W
15k	5	Metal / Carbon Film	1/4W
27k	2	Metal / Carbon Film	1/4W
56k	3	Metal / Carbon Film	1/4W
100k	1	Metal / Carbon Film	1/4W
150k	1	Metal / Carbon Film	1/4W
220k	3	Metal / Carbon Film	1/4W
390k	2	Metal / Carbon Film	1/4W
470k	2	Metal / Carbon Film	1/4W
1M	4	Metal / Carbon Film	1/4W
4M7	1	Metal / Carbon Film	1/4W
47pF	1	Ceramic / MLCC	16v min.
150pF	1	Ceramic / MLCC	16v min.
220pF	1	Ceramic / MLCC	16v min.
1n	2	Film	16v min.
2n2	1	Film	16v min.
10n	4	Film	16v min.
47n	1	Film	16v min.
100n	3	Film	16v min.
470n	1	Film	16v min.
1uF	5	Electrolytic	16v min.
4u7	1	Electrolytic	16v min.
10uF	3	Electrolytic	16v min.
100uF	1	Electrolytic	16v min.
1n914	2		
1N5817	1		
2n3904	5		
3080	1	*see notes	
TL072	1		
LM13700	1	*see notes	
2k	1	Bourns 3362p or 6mm	
10kB	1	PCB Right Angle	16mm
50kA	1	PCB Right Angle	16mm
250kB	1	PCB Right Angle	16mm
250kC	1	PCB Right Angle	16mm
500kC	1	PCB Right Angle	16mm

Additional Hardware

(1) 125B enclosure
(2) 1/4” mono jacks
(1) Slim 2.1mm DC jack
(1) Standard 3PDT footswitch
(1) 5mm LED

Build Notes

Remember: use only the CA3080 or the LM13700. Not both! I found them to be comparable in the Kompromat with perhaps a hair more compression at max settings with the LM13700. But, there is plenty of compression whichever chip you use so don't sweat it. You can easily swap them out to test yourself.

BIAS trimmer adjustment

Start with

- BLEND and SUS to max
- CLIP to min
- BIAS, ATTACK and LVL to midway

Play chords and/or notes and listen to the output. Make small adjustments to the BIAS trim (left or right) to get the cleanest output possible with no gating. Usually this will be in the middle of the BIAS trimmer anyway. If you are not using single coils for testing, adjust the CLIP control to ensure you get a good response with your BIAS trimmer setting. It may take some back and forth but should be straight-forward to set correctly with just listening.

Circuit Voltages

IC1	CA3080
1	ignore
2	4.55
3	4.55
4	0
5	0.66
6	2.72
7	9.18
8	ignore

IC2	TL072
1	4.59
2	4.72
3	4.57
4	0
5	4.58
6	4.58
7	4.58
8	9.18

IC3	LM13700
1	1.2
2	2.11
3	4.6
4	4.6
5	2.5
6	0
7	ignore
8	1.84
9	ignore
10	ignore
11	9.18
12	ignore
13	ignore
14	ignore
15	ignore
16	ignore

Q1	2n3904
C	7.64
B	2.06
E	1.54

Q2	2n3904
C	7.02
B	2.72
E	2.15

Q3	2n3904
C	8.9
B	~mV
E	0

Q4	2n3904
C	8.9
B	~mV
E	0

Q5	2n3904
C	9.18
B	8.9
E	8.47

- 9.42vDC One Spot
- Current Draw: 5mA
- Readings were taken with all knobs about halfway up.
- Note the difference in readings on the bias input pins of the two OTA chips (pin6 of the CA3080 and pin 1 of the LM13700). This may account for any difference in compression levels between the two.

Drill Template

Coordinates are denoted in (X,Y), drill size format starting from the center (0,0) location of the enclosure.

Tayda drill template: https://drill.taydakits.com/box-designs/new?public_key=eGwxd080M0dHeFpIWUFWT0dtbmJvdz09Cg==

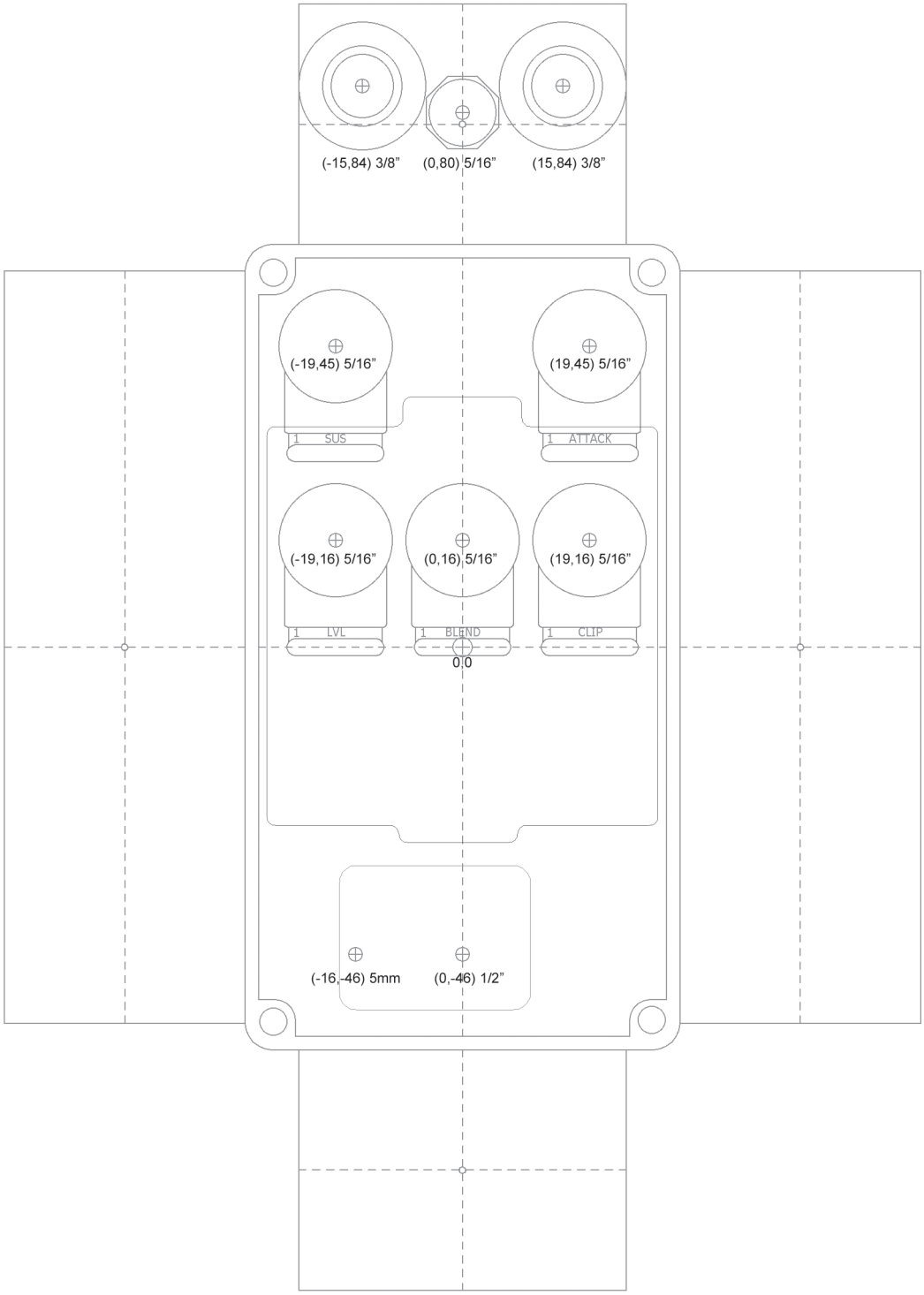

Hardware

125B enclosure
Mono jacks
Slim 2.1mm DC jack
Standard 3PDT footswitch
5mm LED

NOTE: Different 1/4" and DC jack styles may require different sized drill holes.

Build Pic

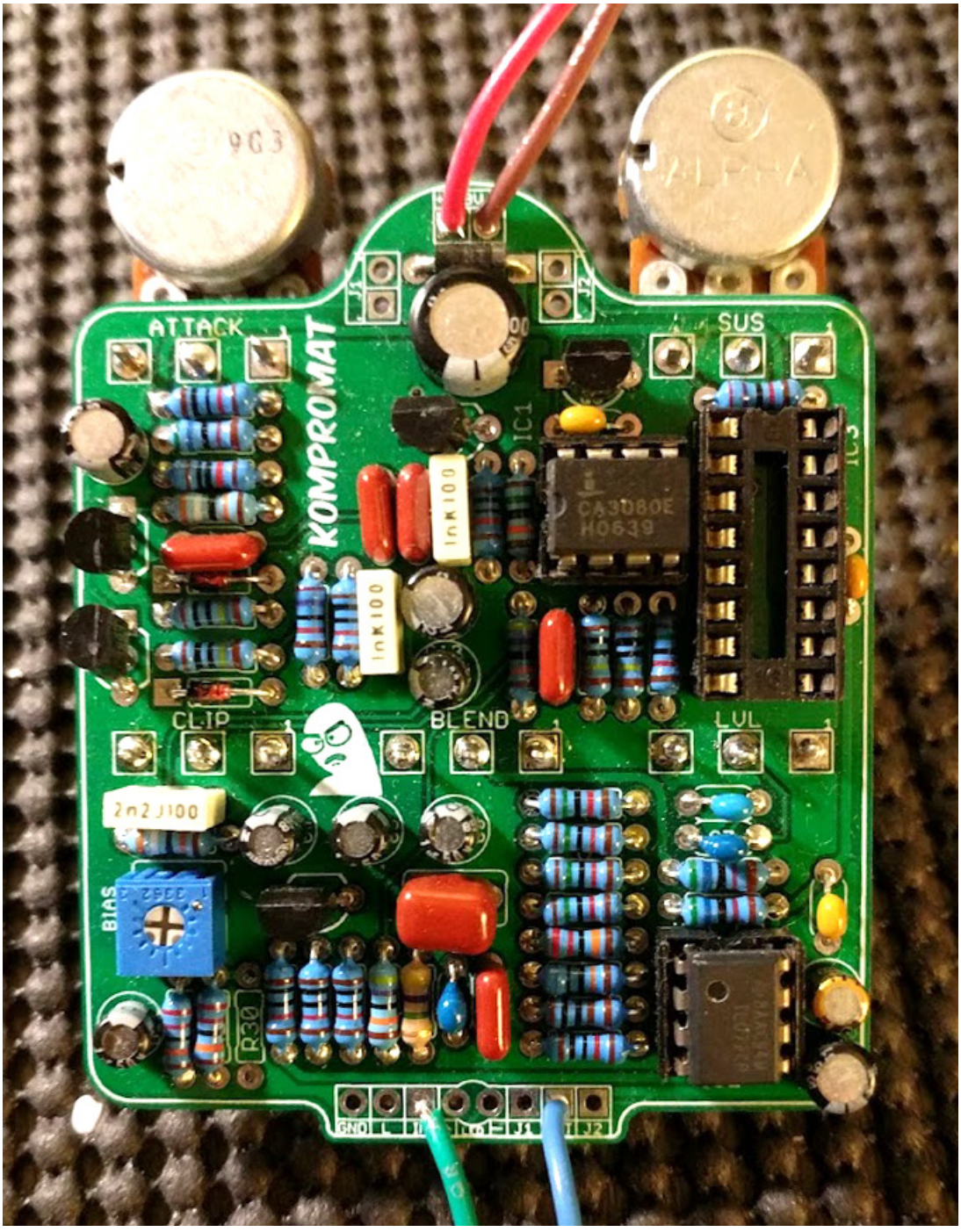

Previous version build

Schematic

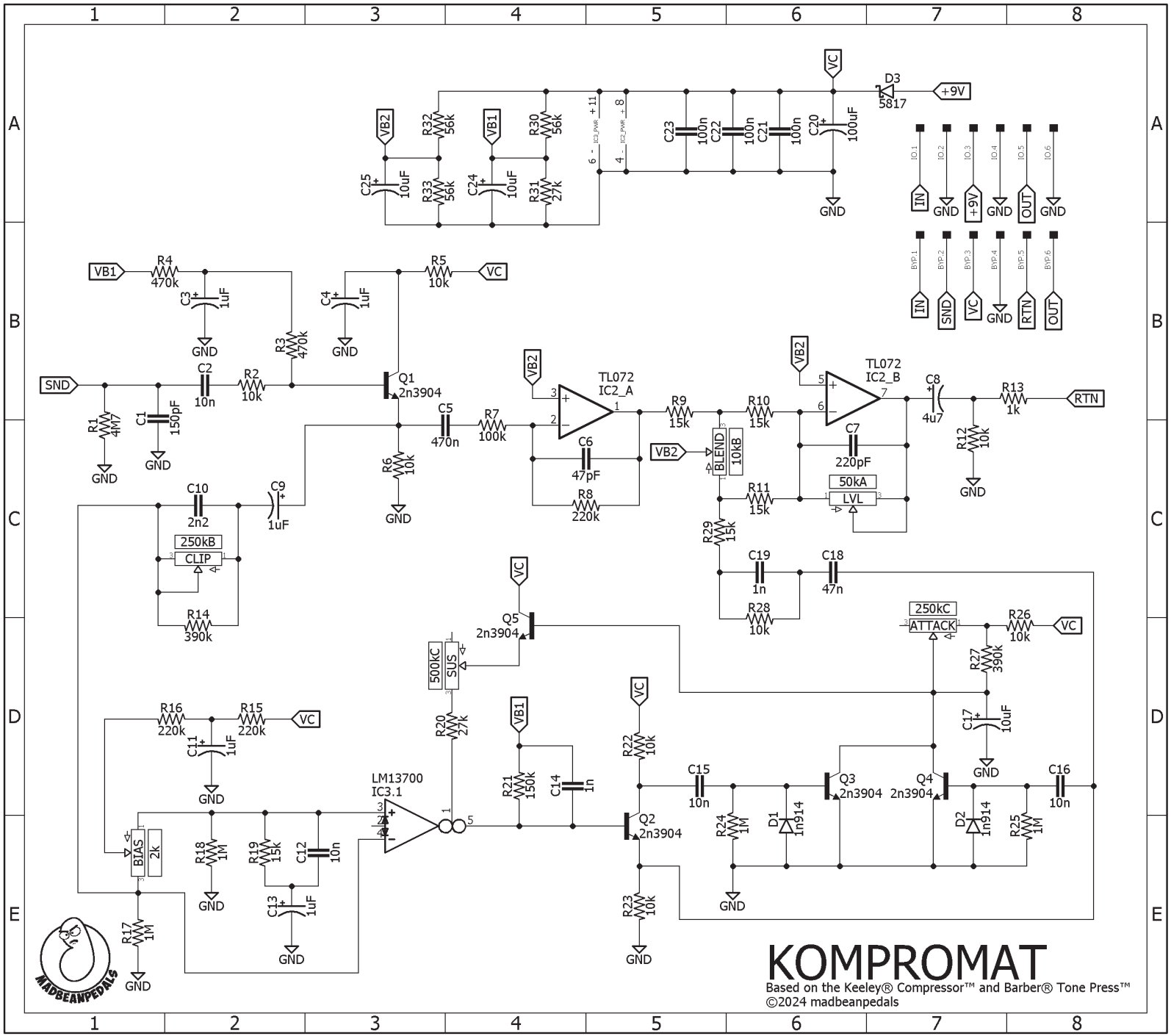

KOMPROMAT
Based on the Keeley® Compressor™ and Barber® Tone Press™
©2024 madbeanpedals
MADBEANPEDALS
TL072
IC2_A
TL072
IC2_B
LM13700
IC3.1
Q1
2n3904
Q2
2n3904
Q3
2n3904
Q4
2n3904
Q5
2n3904
D1
1n914
D2
1n914
D3
5817
+9V
VC
VB1
VB2
SND
RTN
GND
IN
OUT
BLEND
10kB
50kA
LVL
250kB
CLIP
500kC
SUS
250kC
ATTACK
BIAS
2k