CHAOD

FX TYPE: Overdrive
Enclosure Size: 1590B
© 2022 madbeanpedals

Overview

The **Chaod** (CheapAssOverdrive) is a circuit I worked up in response to the recent DIYSB Challenge for a low parts count overdrive. The criteria are:
- gain and volume control
- smooth tone
- soft-ish clipping
- at least one opamp
- minimum 100k input impedance

I probably did not hit the mark in *lowest part count* possible, but all considered this one delivers good bang for the buck.

- I opted for a simple soft-clipping gain stage followed by a Sallen-Key style filter in the absence of a tone control. The filter rolls off a decent chunk of the presence from the gain stage and makes the resulting overdrive smooth. I did not use a calculator or simulation for the values but went with “best guess”. The only change made from my guess was to increase C4 from 4n7 to a final value of 10n (to reduce some of the “bite”). The filter is the prime area to make modifications to your personal taste.
- Initially, I tried an asymmetrical pair of BAT41 and 1n914 for clipping but that ended up letting a little too much clean signal come through. That is an interesting sound but probably less preferred for a straight-forward ‘hair-grower’ like the Chaod.
- R9 was added to balance out the volume control. It has a decent amount of output on tap and the series resistance moved unity more toward 40% rather than ~20% in its absence.
- The 4580DD was chosen for it’s noise performance and also because I happen to like it these types of overdrives.
- To simplify the parts count, I chose to omit the typical voltage divider + current limiting resistor for virtual ground and just do it right at the input of IC1. I chose an offset voltage divider (1M and 820k) with the thought that pushing the bias voltage lower might reduce the headroom (and actual goal to make it clip easily). It does seem to clip pretty quickly when the Gain control is turned up. However, you’d really need to put a scope on it to compare it to equal values (1M for both) and flipped the other way around (820k/1M) to see how much of an effect it has.

This circuit should be an easy one to build for all levels, whether using the etching artwork included in this document, vero, perf, or even throwing it on a breadboard just to listen to it.

Controls

- Vol, Gain - self explanatory.

Terms of Use: Etcher’s Paradise projects are intended for DIY use only. Commercial pedal manufacturing using these materials is strictly forbidden.
Technical assistance for your build(s) is available via the madbeanpedals forum. Please go there rather than emailing me for assistance on builds. This is because (1) I’m not always available to respond via email in a timely and continuous manner, and (2) posting technical problems and solutions in the forum creates a record from which other members may benefit.

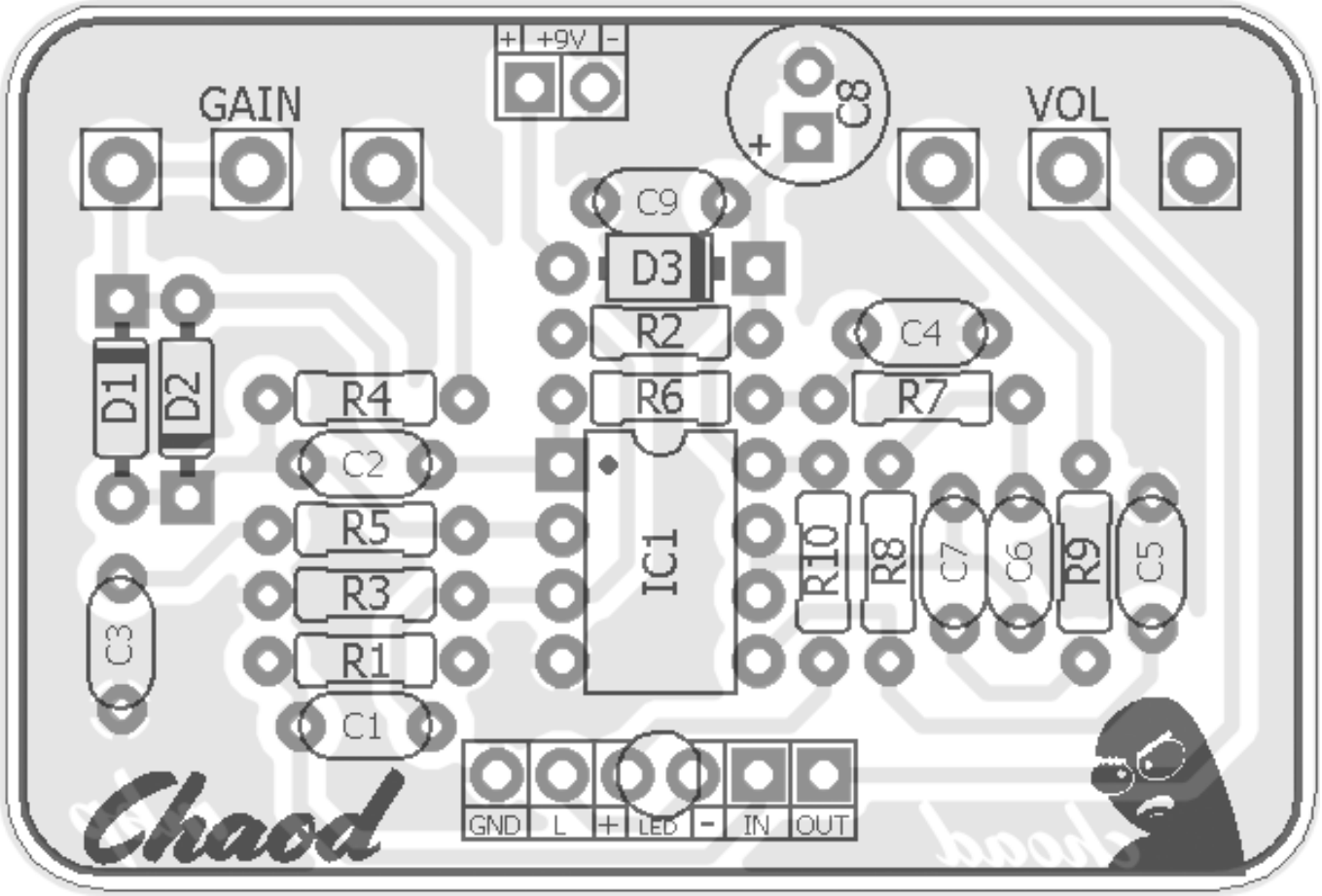

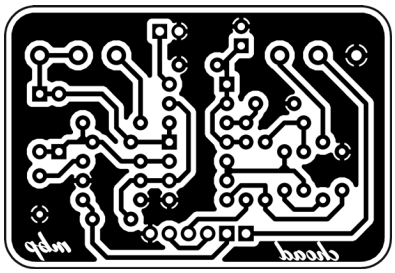

Transfer Image
- do not use any page
scaling when printing

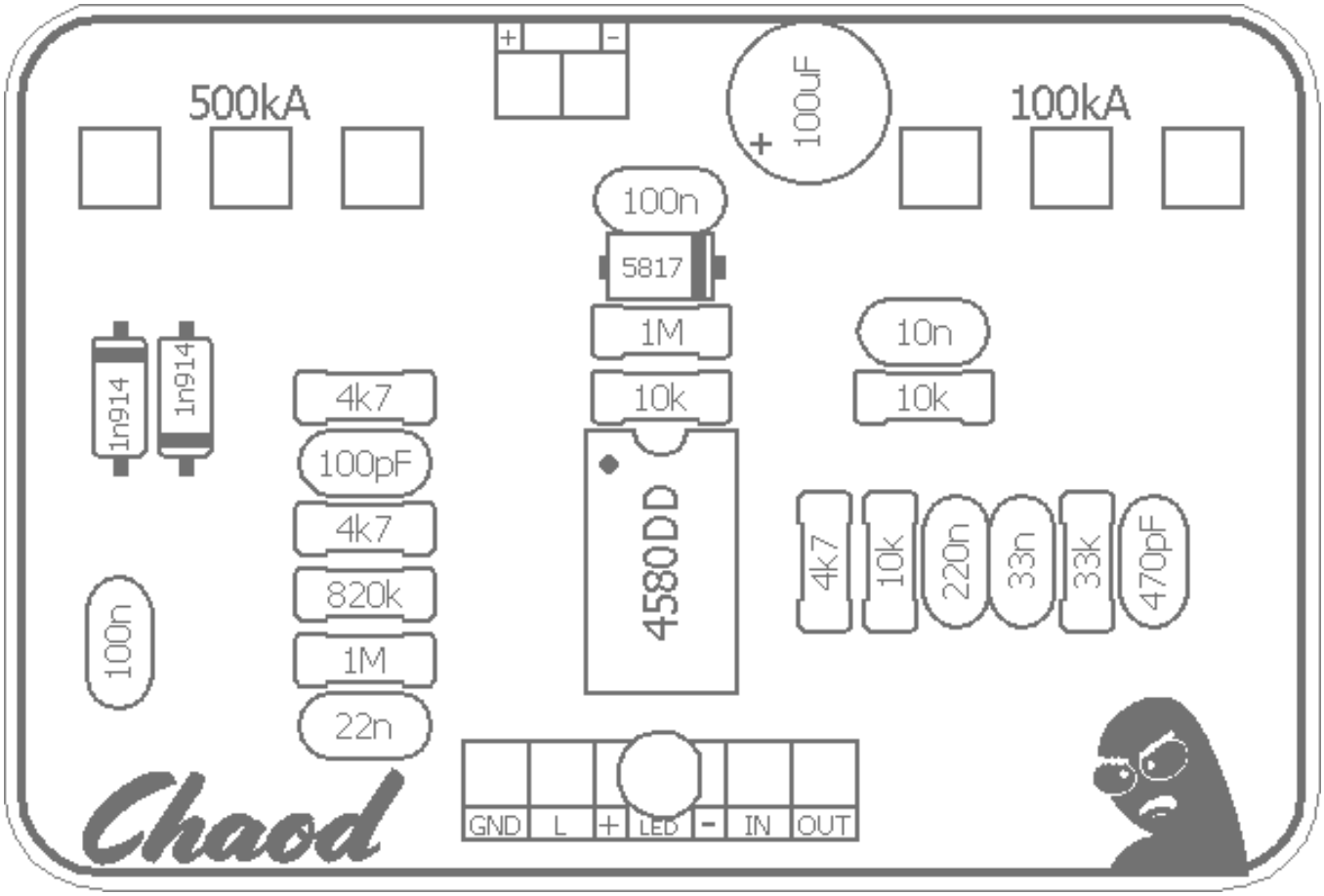
500kA
100kA
+
-
100uF
100n
5817
1M
10k
10n
10k
1n914
1n914
4k7
100pF
4k7
820k
1M
22n
100n
4580DD
4k7
10k
220n
33n
33k
470pF
GND
L
+
LED
-
IN
OUT
Chaod

Resistors		Caps		Diodes	
R1	1M	C1	22n	D1	1n914
R2	1M	C2	100pF	D2	1n914
R3	820k	C3	100n	D3	1n5817
R4	4k7	C4	10n	IC	
R5	4k7	C5	470pF	IC1	4580DD
R6	10k	C6	33n	Pots	
R7	10k	C7	220n	VOL	100kA
R8	10k	C8	100uF	GAIN	500kA
R9	33k	C9	100n		
R10	4k7				

Value	QTY	Type	Rating
4k7	3	Carbon / Metal Film	1/4W
10k	3	Carbon / Metal Film	1/4W
33k	1	Carbon / Metal Film	1/4W
820k	1	Carbon / Metal Film	1/4W
1M	2	Carbon / Metal Film	1/4W
100pF	1	Ceramic / MLCC	16v min.
470pF	1	Ceramic / MLCC	16v min.
10n	1	Film	16v min.
22n	1	Film	16v min.
33n	1	Film	16v min.
100n	2	Film	16v min.
220n	1	Film	16v min.
100uF	1	Electrolytic	16v min.
1n914	2		
1n5817	1		
4580DD	1		
100kA	1	PCB Right Angle	16mm
500kA	1	PCB Right Angle	16mm

Note: *Drill Guides are approximate and may require tweaking depending on the types of hardware you use.*

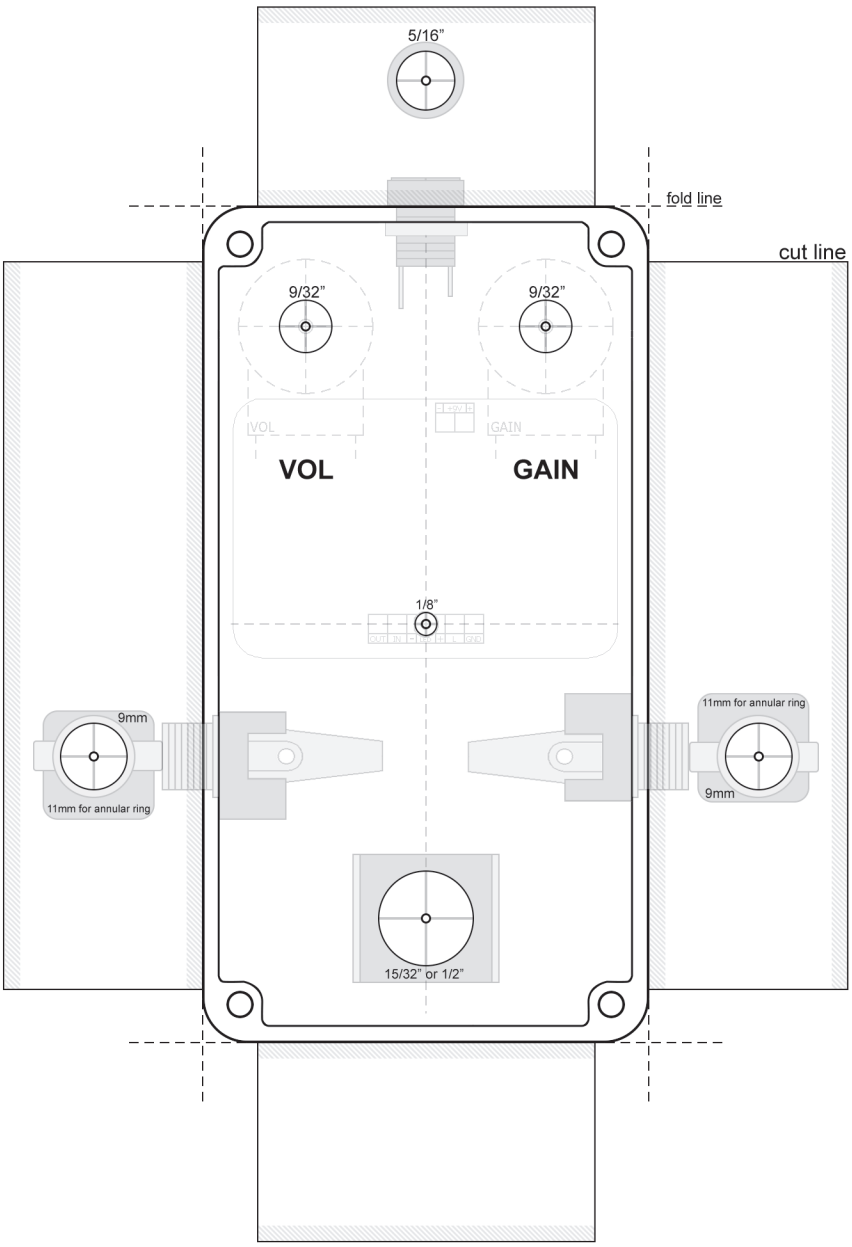

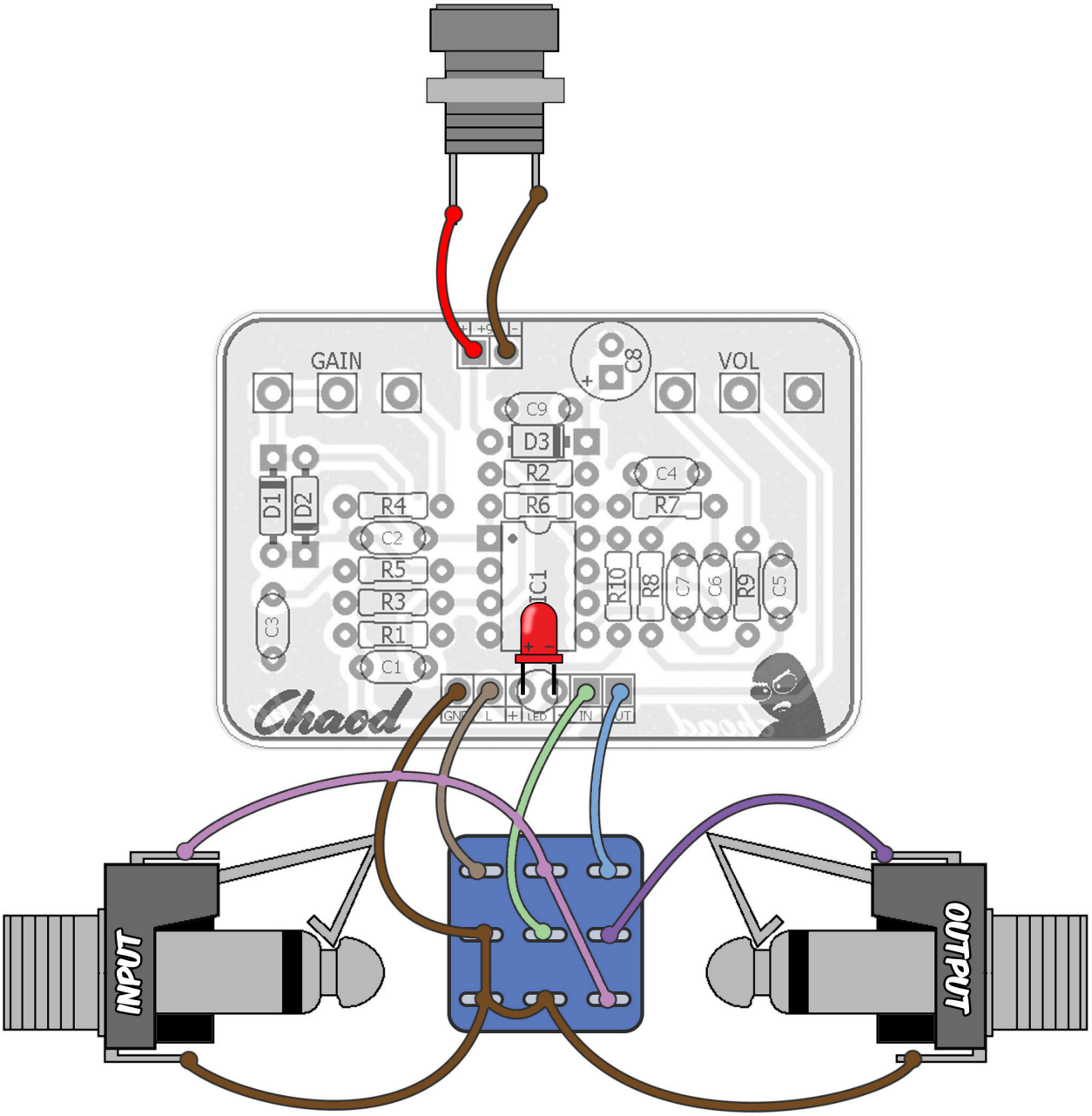
GAIN
VOL
C8
C9
D3
R2
R6
C4
R7
D1
D2
R4
C2
R5
R3
R1
C1
C3
IC1
R10
R8
C7
C6
R9
C5
Chaod
GND
L
+
LED
IN
OUT
INPUT
OUTPUT

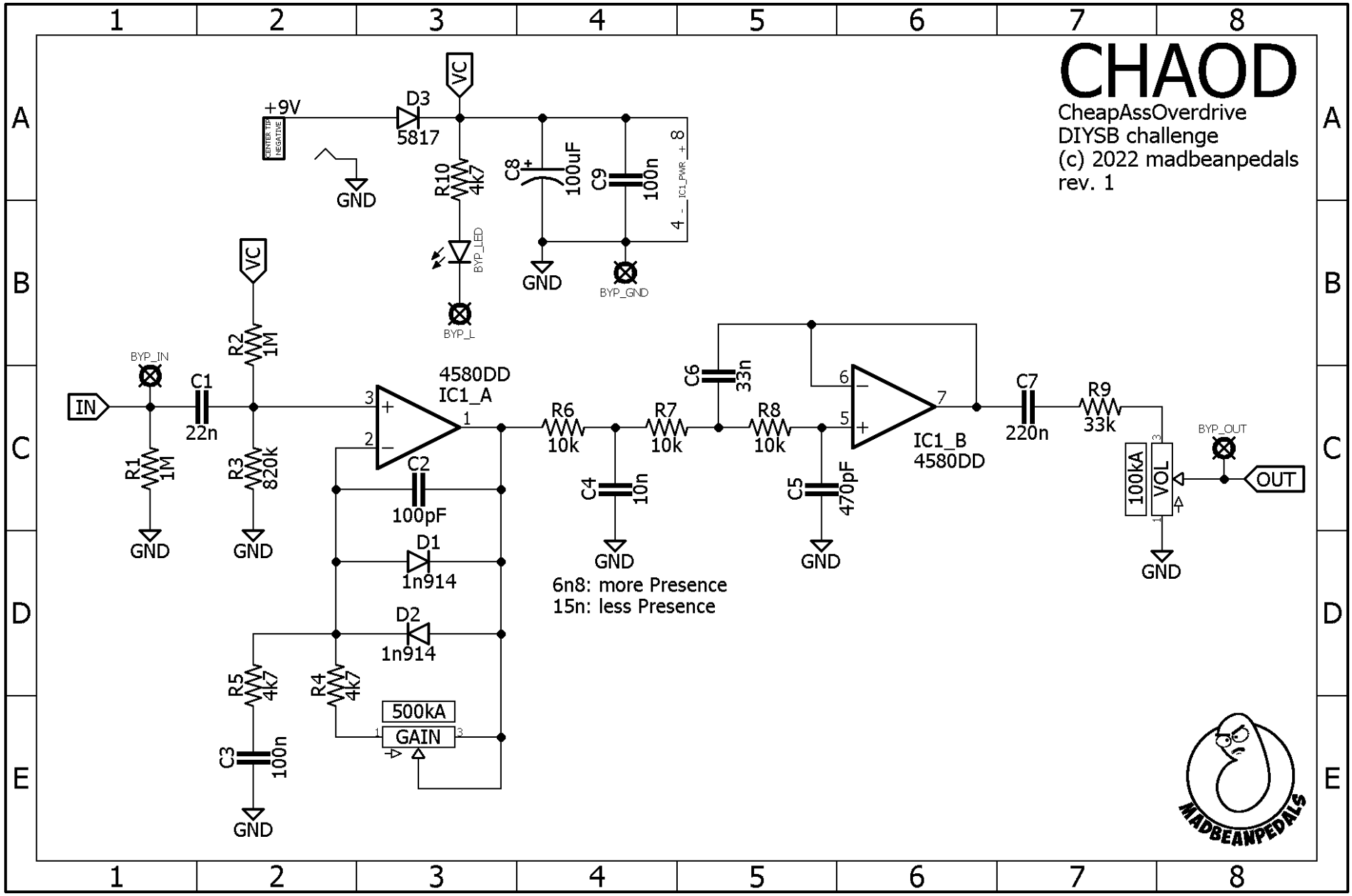
CHAOD
CheapAssOverdrive
DIYSB challenge
(c) 2022 madbeanpedals
rev. 1
+9V
CENTER TIP NEGATIVE
D3
5817
VC
GND
R10
4k7
C8
100uF
C9
100n
4 - _ IC1_PWR _ + 8
BYP_LED
BYP_L
BYP_GND
BYP_IN
IN
C1
22n
R1
1M
R2
1M
R3
820k
4580DD
IC1_A
C2
100pF
D1
1n914
D2
1n914
R5
4k7
R4
4k7
C3
100n
500kA
GAIN
R6
10k
R7
10k
R8
10k
C6
33n
C4
10n
C5
470pF
IC1_B
4580DD
6n8: more Presence
15n: less Presence
C7
220n
R9
33k
100kA
VOL
BYP_OUT
OUT
MADBEANPEDALS