VFE MERMAN™

FX TYPE: Overdrive

Images © VFE and MBP
Project Doc © madbeanpedals

2.17” W x 2.025” H

2.5mm caps
4 x 0.1u

5mm caps
1 x 390p
1 x 820p
1 x 1n
1 x 2.2n
1 x 3.9n
1 x 27n
2 x 68n
1 x 82n
2 x .1u
1 x .39u
3 x 1u

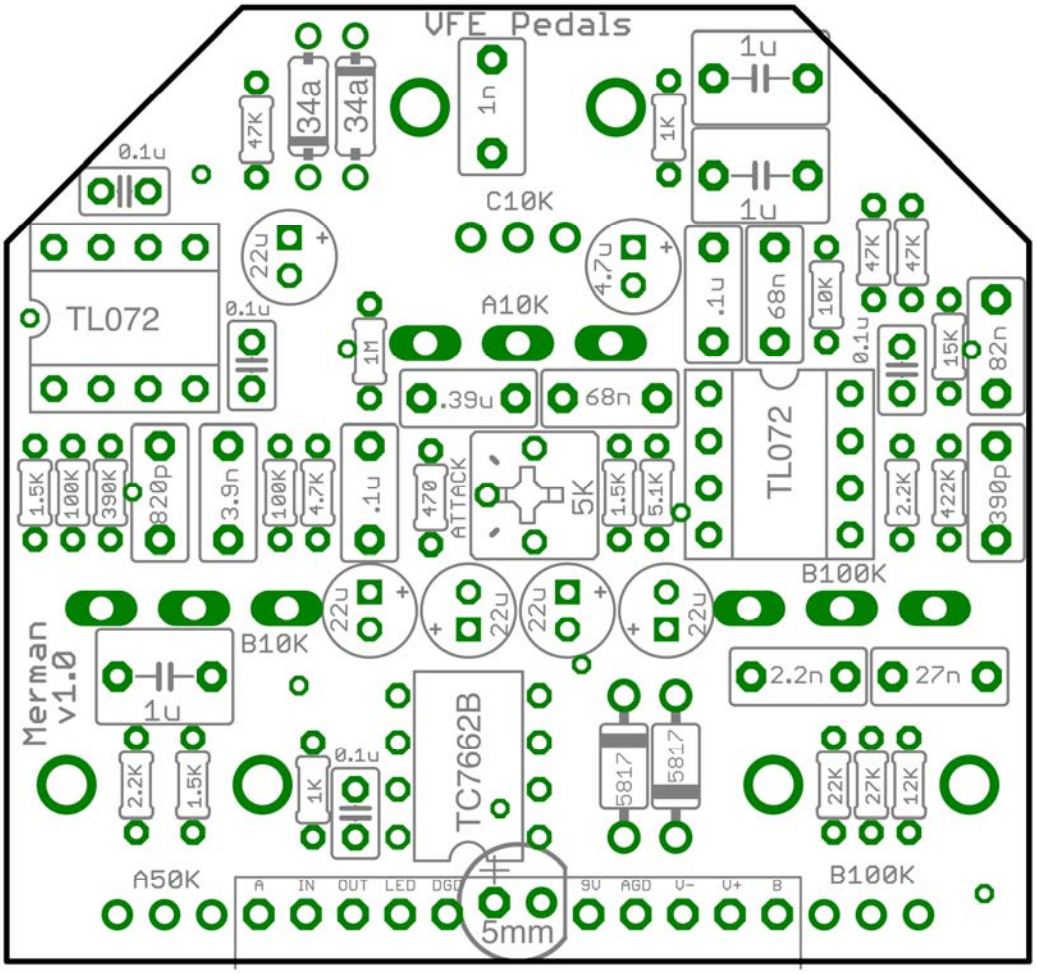

Axial parts
1 x Jumper
1 x 470
2 x 1K
3 x 1.5K
2 x 2.2K
1 x 4.7K
1 x 5.1K
1 x 10K
1 x 12K
1 x 15K
1 x 22K
1 x 27K
3 x 47K
2 x 100K
1 x 390K
1 x 422K
1 x 1M
2 x 1N34a
2 x 1N5817

Other
1 x TC7662B
2 x TL072
1 x 5K trim
1 x 4.7u
5 x 22u

Note: Use the values listed on the image above – not the values indicated on the silk-screen of the PCB. Some values changed over time in the VFE product cycles.

REMINDER: PETER RUTTER / VFE DOES NOT PROVIDE SUPPORT FOR THESE PROJECTS. PLEASE DO NOT CONTACT HIM FOR QUESTIONS OR TECHNICAL SUPPORT. VISIT THE VFE SECTION OF THE MADBEANPEDALS FORUM FOR QUESTIONS AND ANSWERS!

Terms of Use: *These projects are intended for DIY use only and may not be used in any commercial Endeavour including the sale of completed pedals or “kits”. The PCBs are the actual boards used to build the recently discontinued line of VFE pedals and have been generously provided to the DIY community by VFE for the purpose of DIY only.*

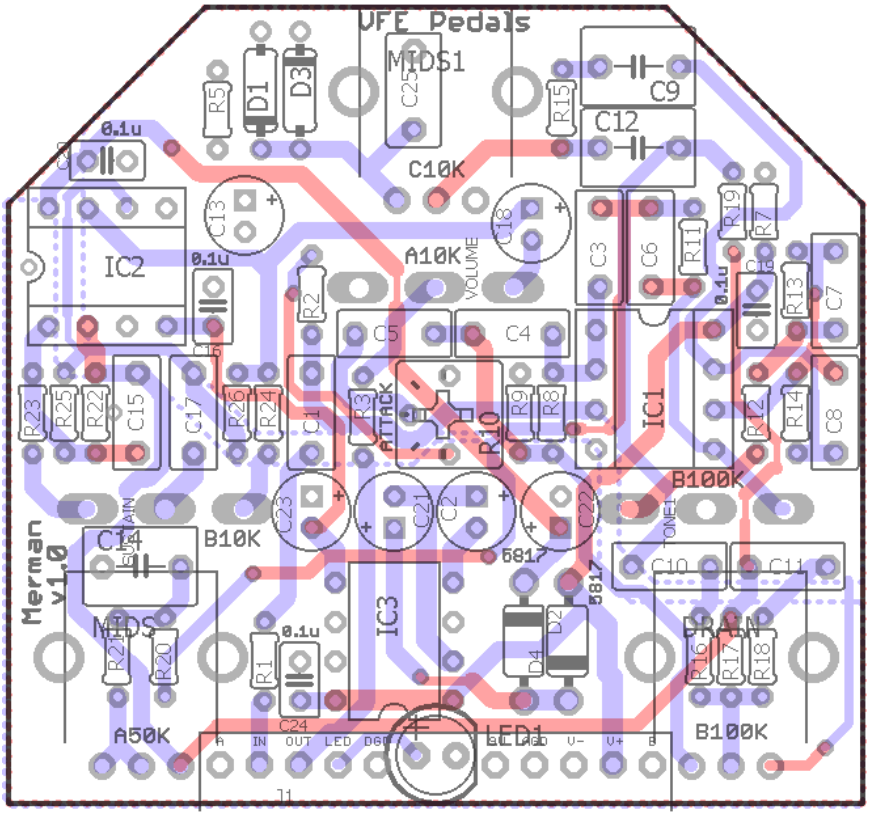
VFE Pedals
MIDS1
C25
R5
D1
D3
R15
C9
C12
0.1u
C10K
C13
C18
IC2
A10K
VOLUME
C3
C6
R11
R19
R7
R13
C7
R2
C5
C4
R23
R25
R22
C15
C17
R26
R24
C1
R3
ATTACK
R10
R9
R8
IC1
R12
R14
C8
B100K
C23
C21
C2
C22
TONE1
C14
B10K
Merman
v1.0
5817
C10
C11
MIDS
IC3
D2
D4
DRAIN
R21
R20
R1
R16
R17
R18
A50K
C24
LED1
B100K
A IN OUT LED DGND
SL AGD V- V+ B
J1

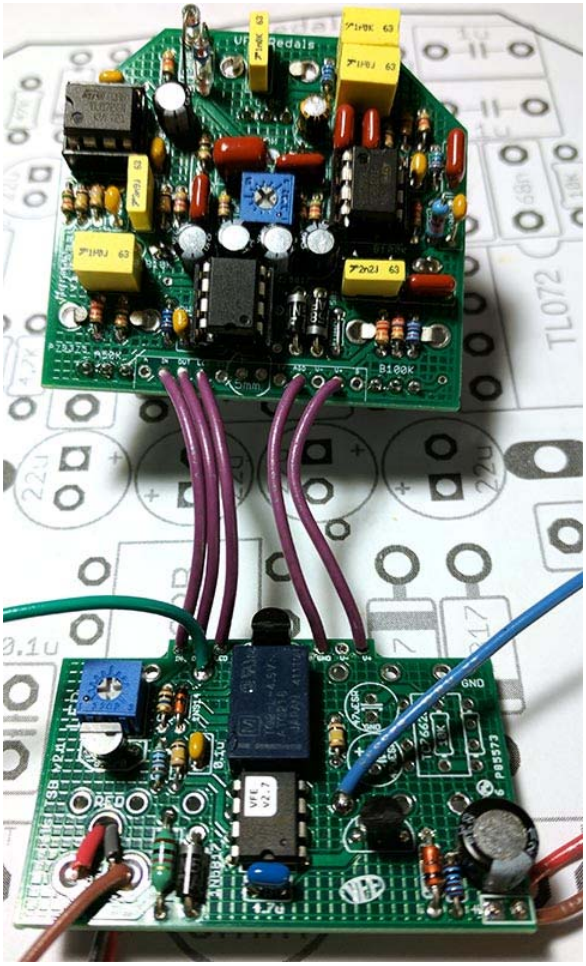
VFE Pedals
TL072
B100K
GND
RED

Shopping List				
Value	QTY	Type	Rating	Spacing
470R	1	Metal / Carbon Film	1/8W	
1k	2	Metal / Carbon Film	1/8W	
1k5	3	Metal / Carbon Film	1/8W	
2k2	2	Metal / Carbon Film	1/8W	
4k7	1	Metal / Carbon Film	1/8W	
5k1	1	Metal / Carbon Film	1/8W	
10k	1	Metal / Carbon Film	1/8W	
12k	1	Metal / Carbon Film	1/8W	
15k	1	Metal / Carbon Film	1/8W	
22k	1	Metal / Carbon Film	1/8W	
27k	1	Metal / Carbon Film	1/8W	
47k	3	Metal / Carbon Film	1/8W	
100k	2	Metal / Carbon Film	1/8W	
390k	1	Metal / Carbon Film	1/8W	
422k	1	Metal / Carbon Film	1/8W	
1M	1	Metal / Carbon Film	1/8W	
390pF	1	Film / MLCC	25v min.	5mm
820pF	1	Film / MLCC	25v min.	5mm
1n	1	Film	25v min.	5mm
2n2	1	Film	25v min.	5mm
3n9	1	Film	25v min.	5mm
27n	1	Film	25v min.	5mm
68n	2	Film	25v min.	5mm
82n	1	Film	25v min.	5mm
100n	2	Film	25v min.	5mm
100n	4	Film	25v min.	2.5mm
390n	1	Film	25v min.	5mm
1uF	3	Film	25v min.	5mm
4u7	1	Electrolytic	25v min.	
22uF	5	Electrolytic	25v min.	
1n34a	2			
1N5817	2			
TL072	2			
TC7662B	1			
5k	1	Bourns 3362p		
10kA	1	PC Mount Right Angle	16mm	
10kB	1	PC Mount Right Angle	16mm	
100kB	1	PC Mount Right Angle	16mm	
10kC	1	PC Mount, Plastic Shaft	9mm	
50kA	1	PC Mount, Plastic Shaft	9mm	
100kB	1	PC Mount, Plastic Shaft	9mm	

This list is for the audio board only. See the approriate Switching Board doc for the parts needed for the switching system.

100n: http://www.mouser.com/Search/ProductDetail.aspx?R=C320C104K5R5TAvirtualkey64600000virtualkey80-C320C104K5R

22uF (low ESR):
http://www.mouser.com/ProductDetail/Nichicon/UPW1E220MDD6TP/?qs=sGAEpiMZZMtZ1n0r9vR22RH2kZvTh%252b0aOlzG%252brmibKY%3d

Bourns 5k (3362p):
http://www.mouser.com/ProductDetail/Bourns/3362P-1-502LF/?qs=sGAEpiMZZMvygUB3GLcD7pXz6c6XAR3tLU32B218z4E%3d

9mm Plastic Shaft, PC Mount (50kA, 100kB):
http://smallbear-electronics.mybigcommerce.com/alpha-single-gang-9mm-right-angle-pc-mount-w-knurled-plastic-shaft/

9mm Plastic Shaft, PC Mount (10kC):
http://www.taydaelectronics.com/potentiometer-variable-resistors/rotary-potentiometer/anti-log-reverse/10k-ohm-anti-log-taper-potentiometer-round-knurled-plastic-shaft-pcb-9mm.html

smallbear does not carry reverse audio plastic shaft pots, so I have linked to Tayda which has a few. You can use 10kB instead of 10kC…however, the control will be bunched up at the very end so be aware.

16mm Right Angle, PC Mount: http://smallbear-electronics.mybigcommerce.com/alpha-single-gang-16mm-right-angle-pc-mount/

TC7662B: http://www.mouser.com/ProductDetail/Microchip-Technology/TC7662BCPA/?qs=sGAEpiMZZMsUzhEcHltCuUK8Z7oEyGhv

Wiring

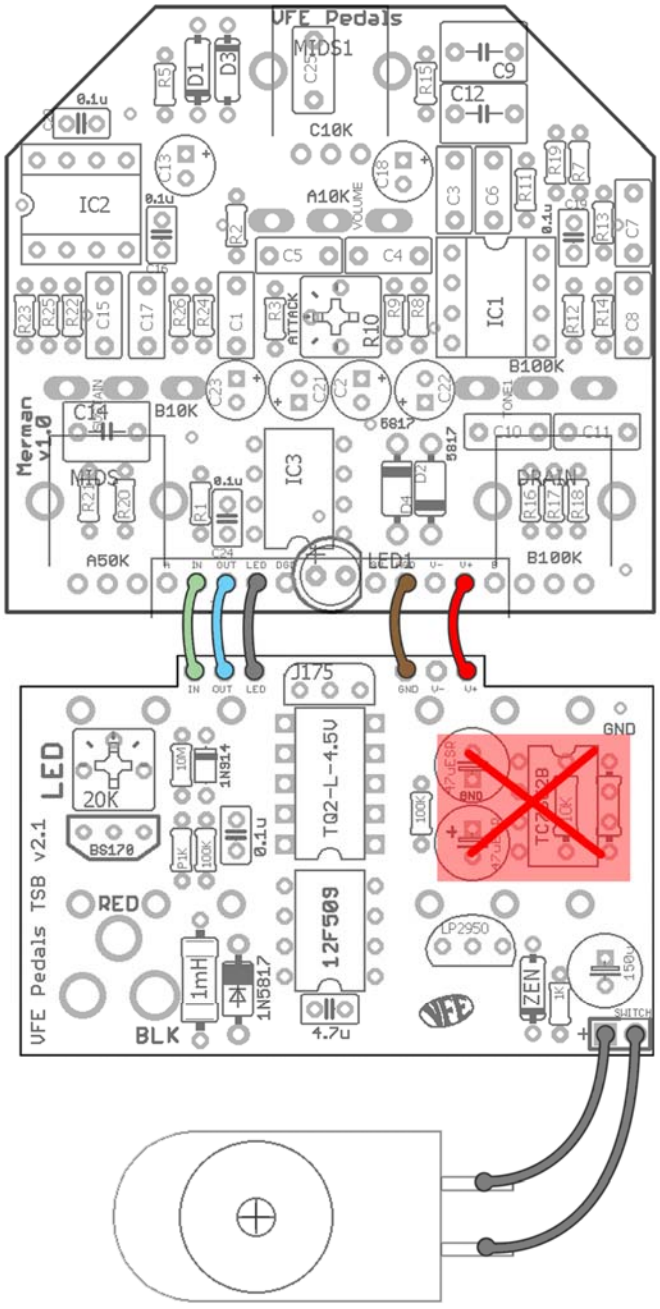

The charge pump is handled on the audio board. Do not populate the area in red on the Switching Board.

Overview

There are a lot of Klones roaming in the wild of GuitarPedalKingdom. The vast majority of these do their best to mimic the original Klon™ as close as possible (which isn't really all that hard). Rarely do you find anyone trying to do something new or different with the design. Cometh the **Merman**…a Klone-like pedal with classic VFE style tweaking! While the basic elements of the Klon™ are in the Merman there's a lot more going on; instead of a dual-ganged pot to blend the dry and dirt signals, the Merman splits these in two. This allows for more subtle blending of dirt *behind* the clean boost path (being the thing people love about the original design). Additional pots and trimmers offer interesting tonal permutations, as well. All this leads to a well-rounded update to an absolute classic.

Controls

Descriptions from the VFE website: **http://vfepedals.com/merman.html**

DRIVE: Sets the gain of the drive signal path. This control works in conjunction with the COMP control to set the level of harmonic saturation in the Merman.

TREBLE: Controls the amount of treble boost or cut in the tone stage.

LEVEL: Sets the output volume of the Merman.

COMP: Dials in the precise amount of compression and harmonic saturation. The more gain added, the more range this control has.

WARM: Controls the volume of the warm, clean signal pathway. The warm control adds a small amount of dynamic body back to the drive tone. This control was tied to the setting of the drive channel in the original circuit. The treble response and maximum volume of this section is set by the internal ATTACK trimpot.

BOTTOM: Controls the volume of the pathway that passes through the very bottom end of the guitar. This control can add clean punch, even when the drive control is cranked. (mbp note: turning this control up *decreases* bass).

Notes

There are two spots on the board next to the TC7662 not pictured on the images on pg.1 and pg.2. The spot right next to the IC (labeled "9v") should be left empty. The other spot (labeled "jump") needs to be jumpered.

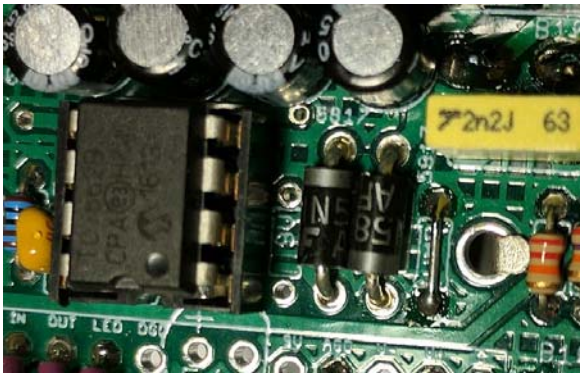

My personal favorite setting (clean boost with a little hair):

Level	Drive	Treble	Comp	Warm	Bottom	Attack
33 - 50%	25%	33%	100%	100%	0%	75%

Voltages

Current Draw: 15mA off, 23mA on. 9.42vDC One Spot.

TL072	V	TL072	V	TC7662B	V
1	4.37	1	4.39	1	8.78
2	4.37	2	4.37	2	5.12
3	3.12	3	4.36	3	0
4	0	4	-8.52	4	-3.54
5	4.36	5	4.36	5	-8.52
6	4.37	6	4.37	6	4.21
7	4.41	7	4.35	7	5.55
8	8.78	8	16.87	8	8.78

The voltage drop through the charge pump is slightly larger than the typical Klon-type circuit. There are a couple of factors in play:

1) The Switching Board has additional power filtering that the Klon™ does not have so the supply voltage going in is smaller (I used a 9.42vDC supply).

2) I used regular 10uF electrolytic caps in my build rather than 22uF low-ESR (did not have those on hand) which might have a small effect on the voltages recorded.

For comparison, I tried a TC1044SCPA and this actually gave a higher voltage drop (16.2v instead of 16.87) so the 7662B is more efficient and therefore preferred. Point being you shouldn't worry about this too much. The audible difference between ~17.5 volts and +16.87v on the second TL072 is going be negligible. To ensure the lowest voltage drop, use the 22uF low ESR caps linked on pg.3.

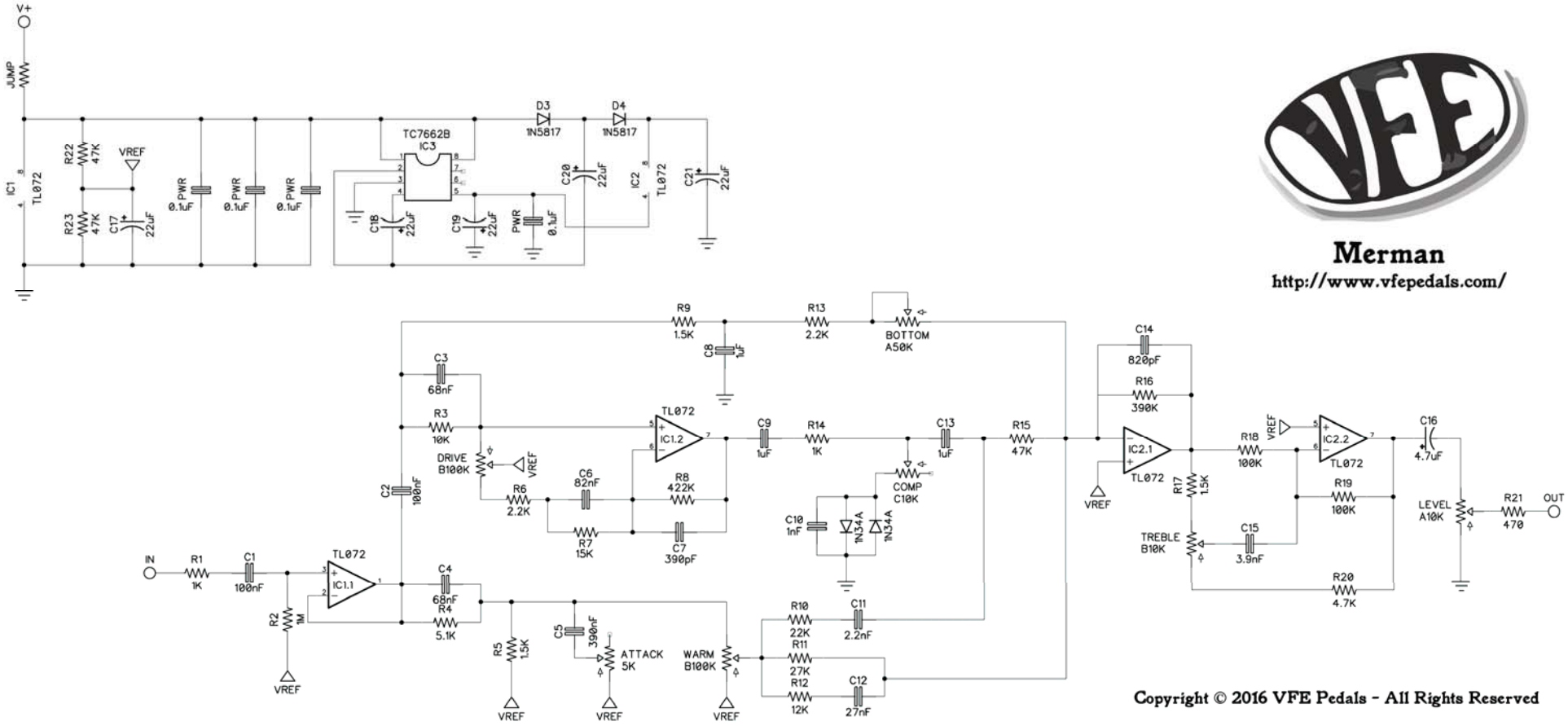

Merman

http://www.vfepedals.com/

Copyright © 2016 VFE Pedals - All Rights Reserved