STAGE FRIGHT

2015 edition

FX TYPE: Phaser

Based on the Maestro Phaser

© 2015 madbeanpedals

2.3" W x 3.45" H

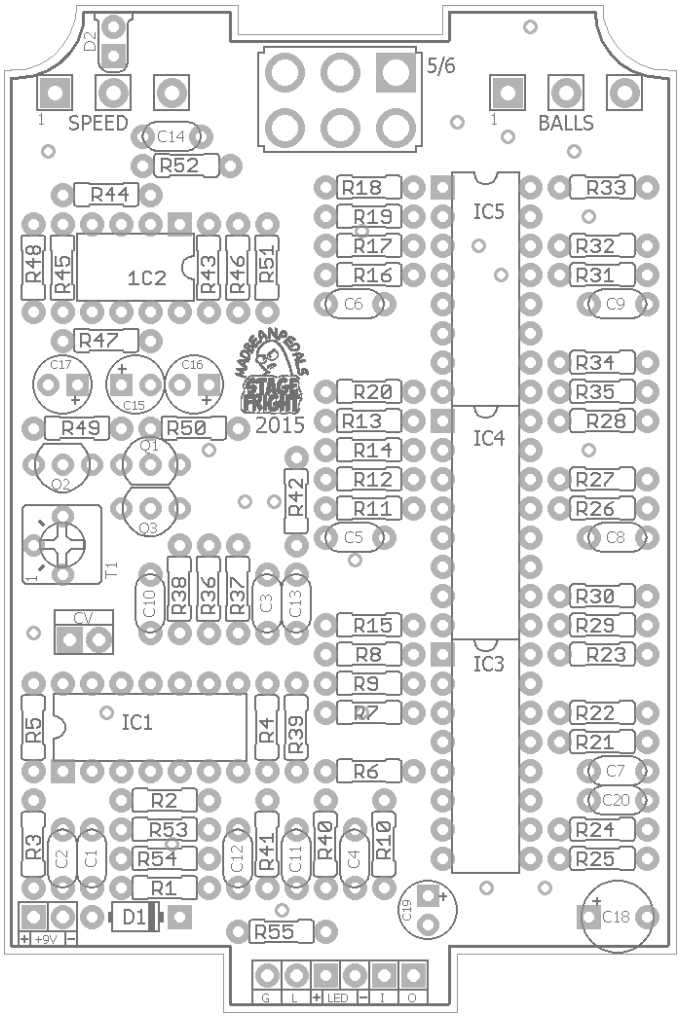

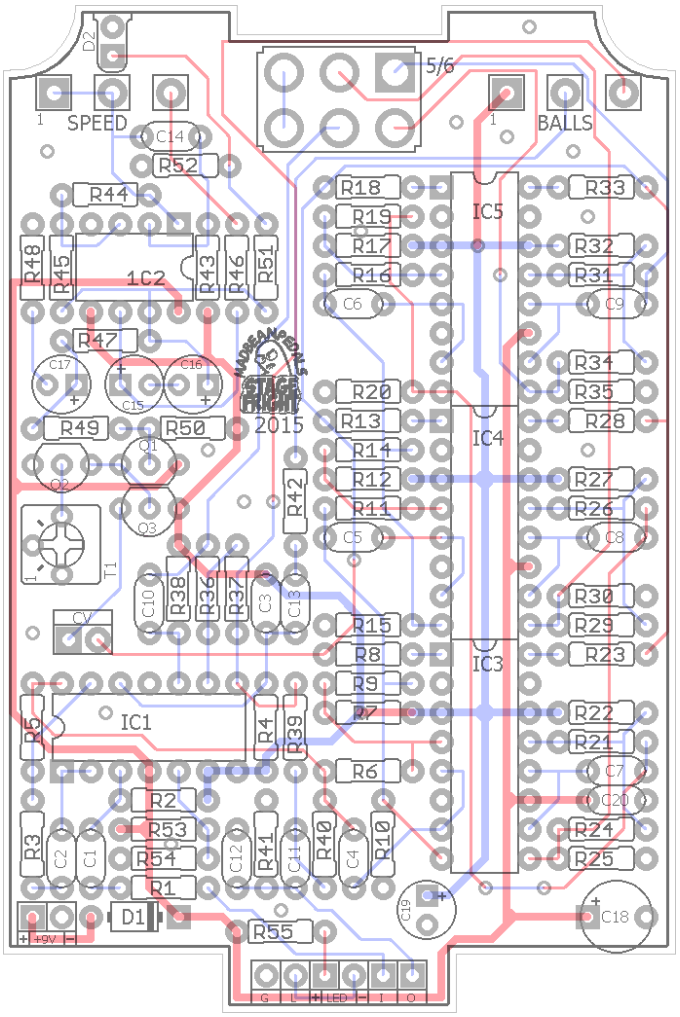

Previous Version: http://www.madbeanpedals.com/StageFright/StageFright.zip

Terms of Use: *You are free to use purchased **Stage Fright** circuit boards for both DIY and small commercial operations. You may not offer **Stage Fright** PCBs for resale or as part of a "kit" in a commercial fashion. Peer to peer re-sale is, of course, okay.*

B.O.M.

Resistors		Resistors		Caps		Diodes	
R1	10k	R29	39k	C1	10n	D1	1N5817
R2	1M	R30	20k	C2	220n	D2	LED
R3	33k	R31	39k	C3	220pF	**Transistors**	
R4	62k	R32	1k5	C4	1n	Q1	2N3904
R5	47k	R33	1k	C5	1n	Q2	2N5457
R6	39k	R34	39k	C6	1n	Q3	2N3906
R7	1k5	R35	20k	C7	1n	**IC**	
R8	1k	R36	390k	C8	1n	IC1	TL074
R9	39k	R37	390k	C9	1n	IC2	TL062
R10	20k	R38	200k	C10	1n	IC3	LM13700
R11	39k	R39	10k	C11	220n	IC4	LM13700
R12	1k5	R40	10k	C12	3n3 - opt	IC5	LM13700
R13	1k	R41	1M	C13	220n	**Switch**	
R14	39k	R42	120k	C14	10n	5/6	DPDT
R15	20k	R43	100k	C15	10uF	**Trimmers**	
R16	39k	R44	300k	C16	10uF	T1	10k
R17	1k5	R45	100k	C17	10uF	**Pots**	
R18	1k	R46	10k	C18	220uF	BALLS	1MC
R19	39k	R47	30k	C19	47uF	SPEED	1MC
R20	20k	R48	3k	C20	100n		
R21	39k	R49	30k				
R22	1k5	R50	2k				
R23	1k	R51	4k7				
R24	39k	R52	4k7				
R25	20k	R53	100k				
R26	39k	R54	100k				
R27	1k5	R55	4k7				
R28	1k						

Shopping List			
Value	**QTY**	**Type**	**Rating**
1k	6	Metal / Carbon Film	1/4W
1k5	6	Metal / Carbon Film	1/4W
2k	1	Metal / Carbon Film	1/4W
3k	1	Metal / Carbon Film	1/4W
4k7	3	Metal / Carbon Film	1/4W
10k	4	Metal / Carbon Film	1/4W
20k	6	Metal / Carbon Film	1/4W
30k	2	Metal / Carbon Film	1/4W
33k	1	Metal / Carbon Film	1/4W
39k	12	Metal / Carbon Film	1/4W
47k	1	Metal / Carbon Film	1/4W
62k	1	Metal / Carbon Film	1/4W
100k	4	Metal / Carbon Film	1/4W
120k	1	Metal / Carbon Film	1/4W
200k	1	Metal / Carbon Film	1/4W
300k	1	Metal / Carbon Film	1/4W
390k	2	Metal / Carbon Film	1/4W
1M	2	Metal / Carbon Film	1/4W
220pF	1	Ceramic	16v min.
1n	7	Film	16v min.
3n3	1	Film	16v min.
10n	2	Film	16v min.
100n	1	Film	16v min.
220n	3	Film	16v min.
10uF	3	Electrolytic	16v min.
47uF	1	Electrolytic	16v min.
220uF	1	Electrolytic	16v min.
1N5817	1		
LED	1	diffused (Rate indicator)	3 or 5mm
2N3904	1		
2N5457	1		
2N3906	1		
TL074	1		
TL062	1		
LM13700	3		
5/6	1	PCB or Solder Lug DPDT	On/On
10k	1	Bourns3362P	
1MC	2	PCB Right Angle	16mm

STAGE FRIGHT

(c) 2015 MADBEANPEDALS

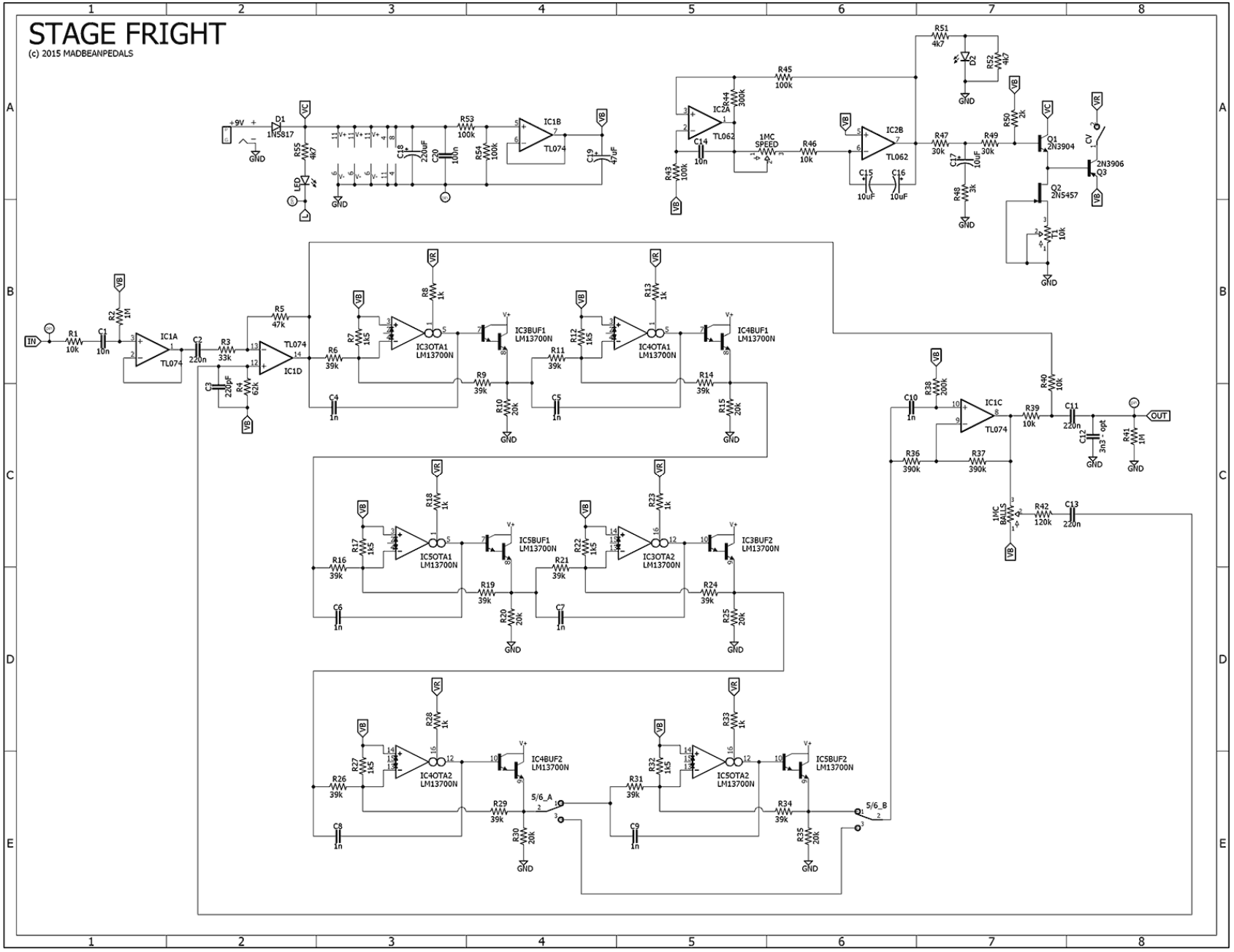

125B Drill Guide

5.52" W x 7.65" H

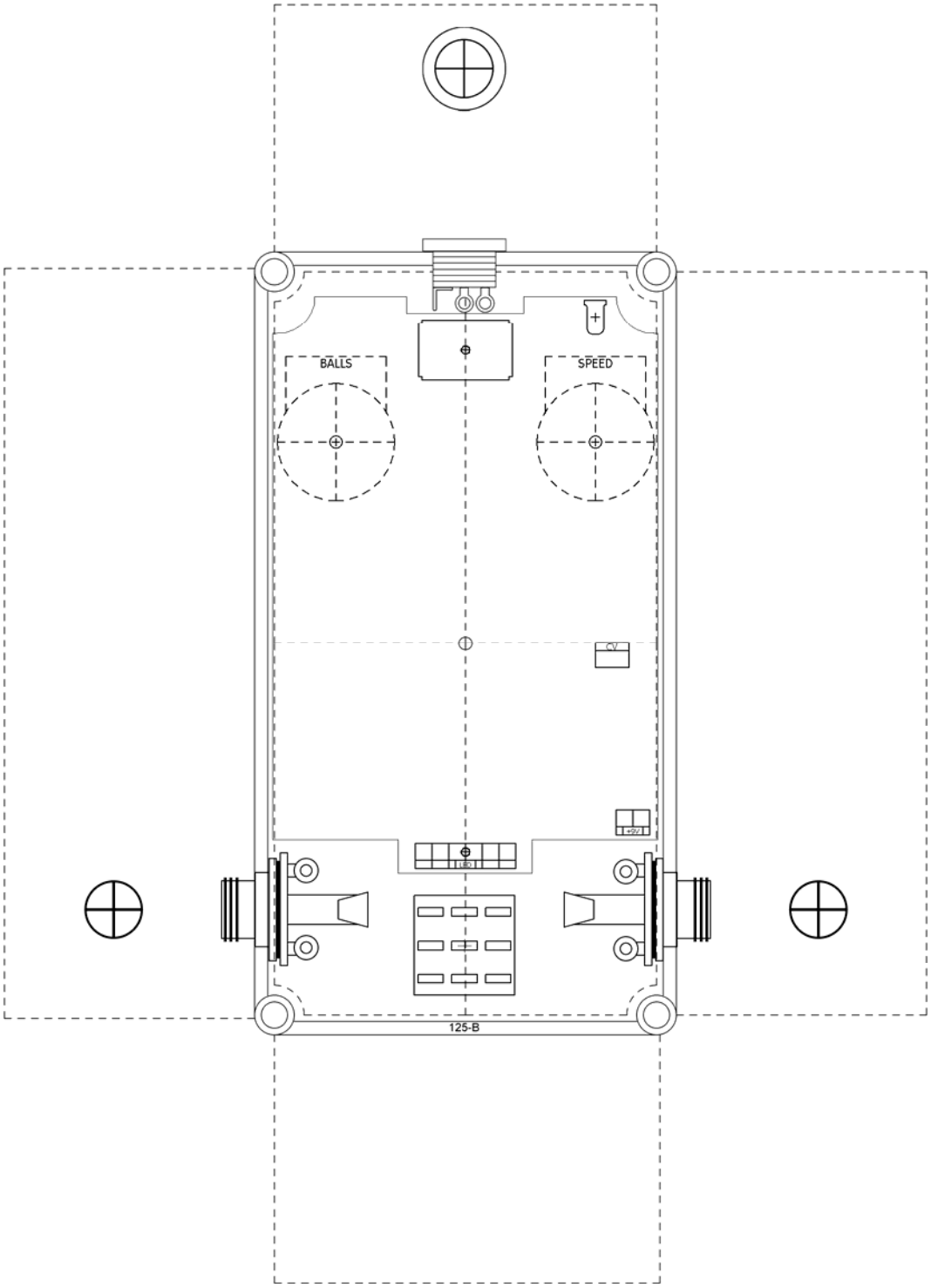

Photoshop File: http://www.madbeanpedals.com/projects/StageFright/StageFright_DILL.zip

Wiring Guide

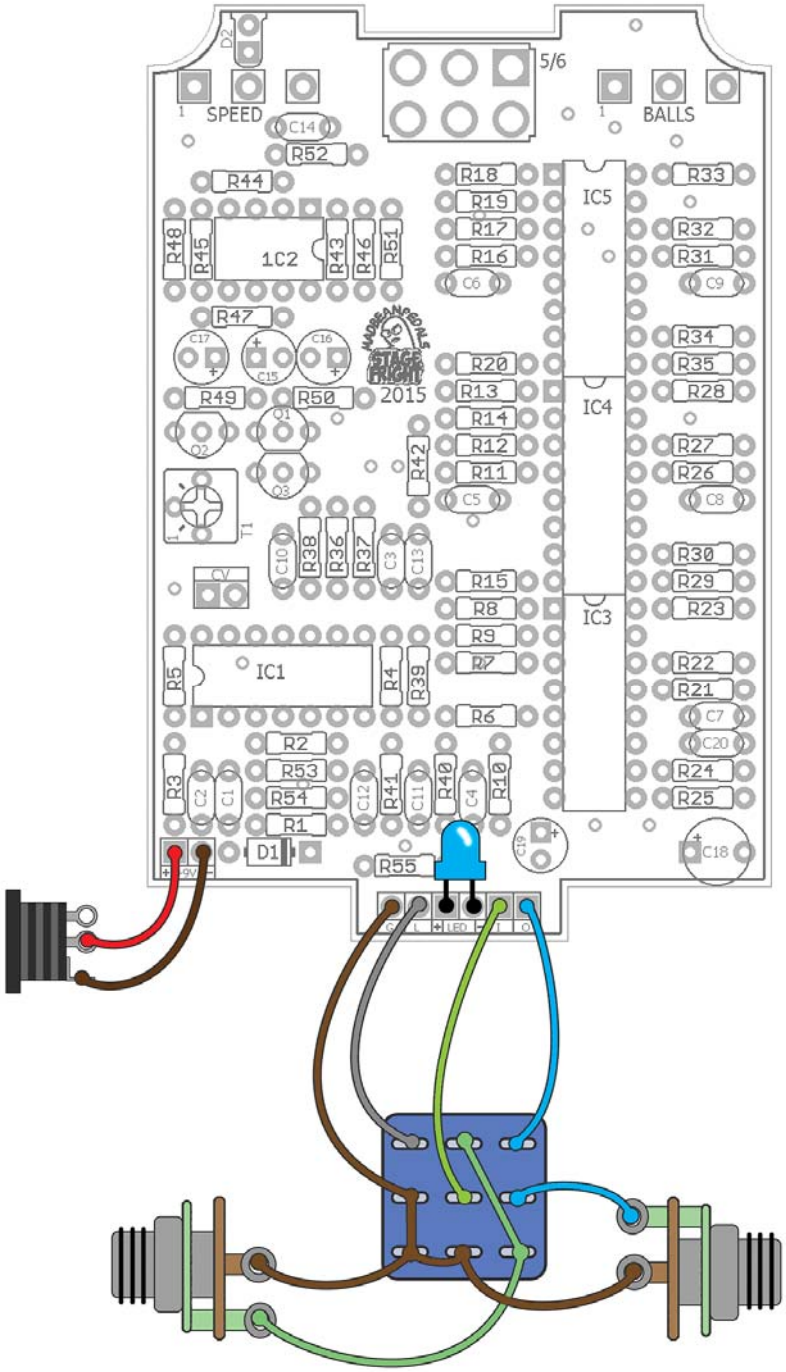

- The indicator LED can be soldered directly to the PCB.

The Stage Fright is a faithful recreation of the often overlooked, but very musical, Maestro Phaser. Take a moment to Google™ the Maestro Phaser to behold its wonderful, very “70’s”, custom enclosure. It is massive! The entire enclosure is basically the footswitch and is bookmarked by two rotary controls. These were meant to be adjusted with your feet (probably not at the same time unless you were really high). Obviously, it is next to impossible to recreate this aspect of the Phaser, but we can at least make an effort to copy the circuit and put it in the much more reasonable 125B enclosure.

The Stage Fright is an OTA-based phaser (Operational Transconductance Amplifier) which has selectable stages. Each phase stage is comprised of ½ of the OTA chip, with the filters being swept by an LFO. The original Phaser was comprised of five phase stages made up of the obsolete CA3094 chips. The Stage Fright instead employs the readily available and inexpensive LM13700 chip in its place. Since each chip has two transducers on it, this affords us the ability to have five OR six phase stages. And, believe it or not, these actually have a distinct character.

The Stage Fright is not a clone of the later Stage Phaser by Maestro. This iteration was very similar to the original with the addition of a ramp on/off feature and a knob that selected between preset Speeds.

Controls

SPEED: Sets the rate of the phase sweep from slow to fast.
BALLS: Sets the amount of feedback (phase output fed back to phase input).
T1: Sets the maximum depth of the LFO.

Notes

D2 is an external LED that will pulse approximately to the speed of the LFO. It can be mounted directly to the PCB without the use of a bezel attachment on the enclosure, if you like.

C12 is an optional 3n3 cap to signal ground at the output of the effect. This was copied from the later Stage Phaser. It will reduce some high end frequencies resulting from the phaser. I personally like this, but you should socket this position and test it out.

There are two pads marked “CV” on the PCB which correspond to the “CV” switch on the schematic. This was included to offer the option of disconnecting the LFO and using an alternative control voltage input such as a sequencer (it may have some integration with the upcoming Dig Dug2 project). For the time being, you should jumper these two pads until this mod idea is more fully realized.

Calibrating the LFO

The T1 trimmer is part of the buffering network for the output of the LFO. It more or less sets the maximum depth of the phase. This is a “set and forget” option—I do not recommend trying to make this an external control. Set the Speed control to halfway and Balls fully up. Now adjust T1 to get the maximum phasing possible without noise or oscillation. Spot check it with the slowest Speed setting and make finer adjustments until you have the best sounding phaser output. That’s all there is to it!

Univibe Mod

If you want to try something a bit different, you can substitute the Univibe phasing sequence in place of four of the six phasing stages. While it does not turn the Stage Fright into a Univibe it does impart more of a “lilt” and is a somewhat more expressive phaser, IMO.

To do the Univibe mod, socket or replace the 1n caps with the following:

C5 – 15n
C6 – 220n
C7 – 470pF
C8 – 4n7

This replaces the middle 2-5 stages of the phaser with the Univibe set. The build video linked on page one of the doc uses this exact mod.

Since someone will inevitably ask: you can use a switch to go between the regular phase caps and the Univibe set. It is extremely painful to wire. Doing so requires a 4PDT toggle with each set of caps wired to the switch then wired back to the PCB. It is not worth it, IMO. In fact, one of the earlier designs of the Stage Fright had this mod included, but I feel that it is too much effort for not enough result. I suggest socketing those four caps and trying each set for yourself to see if you agree.