SLOW LORIS

2015 edition © madbeanpedals

FX Type: Distortion

Based on the ProCo® Rat™

Changes for the 2015 edition: Slight layout adjustments. No circuit changes.

Previous version: http://www.madbeanpedals.com/projects/SlowLoris/docs/SlowLoris.zip

1.95” W x 1.925” H

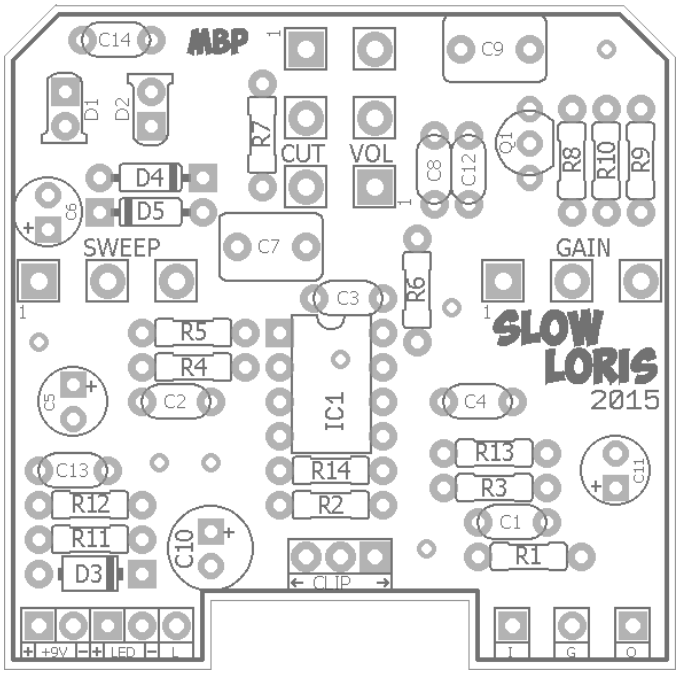

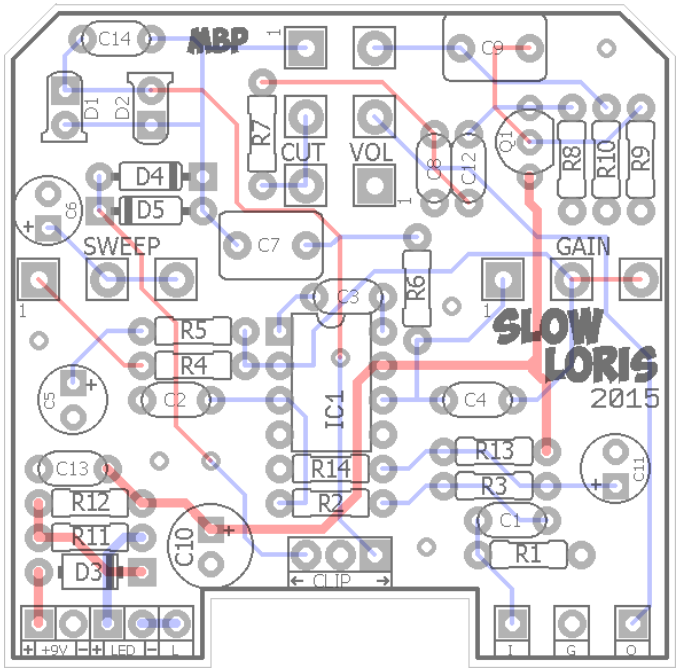

Terms of Use: *You are free to use purchased **Slow Loris** circuit boards for both DIY and small commercial operations. You may not offer **Slow Loris** boards for resale or as part of a “kit” in a commercial fashion. Peer to peer re-sale is, of course, okay*

B.O.M.

Resistors		Caps		Diodes	
R1	1M	C1	22n	D1, D2	Red LED
R2	1k	C2	1n	D3	1N5817
R3	1M	C3	30pF	D4, D5	1N914
R4	47R	C4	100pF	**Transistors**	
R5	560R	C5	4u7	Q1	2N5457
R6	1k	C6	2u2	**IC**	
R7	1k5	C7	1uf	IC1	LM308
R8	1M	C8	3n3	**Switch**	
R9	10k	C9	1uf	CLIP	SPDT
R10	10k	C10	100uF	**Pots**	
R11	4k7	C11	47uF	SWEEP	1kB
R12	47R	C12	22n	VOL	100kA
R13	100k	C13	100n	CUT	100kA
R14	100k	C14	10n	GAIN	100kA

Shopping List

Value	QTY	Type	Rating
47R	2	Carbon / Metal Film	1/4W
560R	1	Carbon / Metal Film	1/4W
1k	2	Carbon / Metal Film	1/4W
1k5	1	Carbon / Metal Film	1/4W
4k7	1	Carbon / Metal Film	1/4W
10k	2	Carbon / Metal Film	1/4W
100k	2	Carbon / Metal Film	1/4W
1M	3	Carbon / Metal Film	1/4W
30pF	1	Ceramic	16v min.
100pF	1	Ceramic	16v min.
1n	1	Film	16v min.
3n3	1	Film	16v min.
22n	2	Film	16v min.
10n	1	Film	16v min.
100n	1	Film	16v min.
1uf	2	Film	16v min.
2u2	1	Electroltyic	16v min.
4u7	1	Electroltyic	16v min.
47uF	1	Electroltyic	16v min.
100uF	1	Electroltyic	16v min.
Red LED	2	3 or 5mm, Diffused	
1N5817	1		
1N914	2		
2N5457	1		
LM308	1		
SPDT	1	On/On	
1kB	1	PCB Right Angle	16mm
100kA	3	PCB Right Angle	16mm

If you cannot find a 30pF cap, use 33pF for C3.

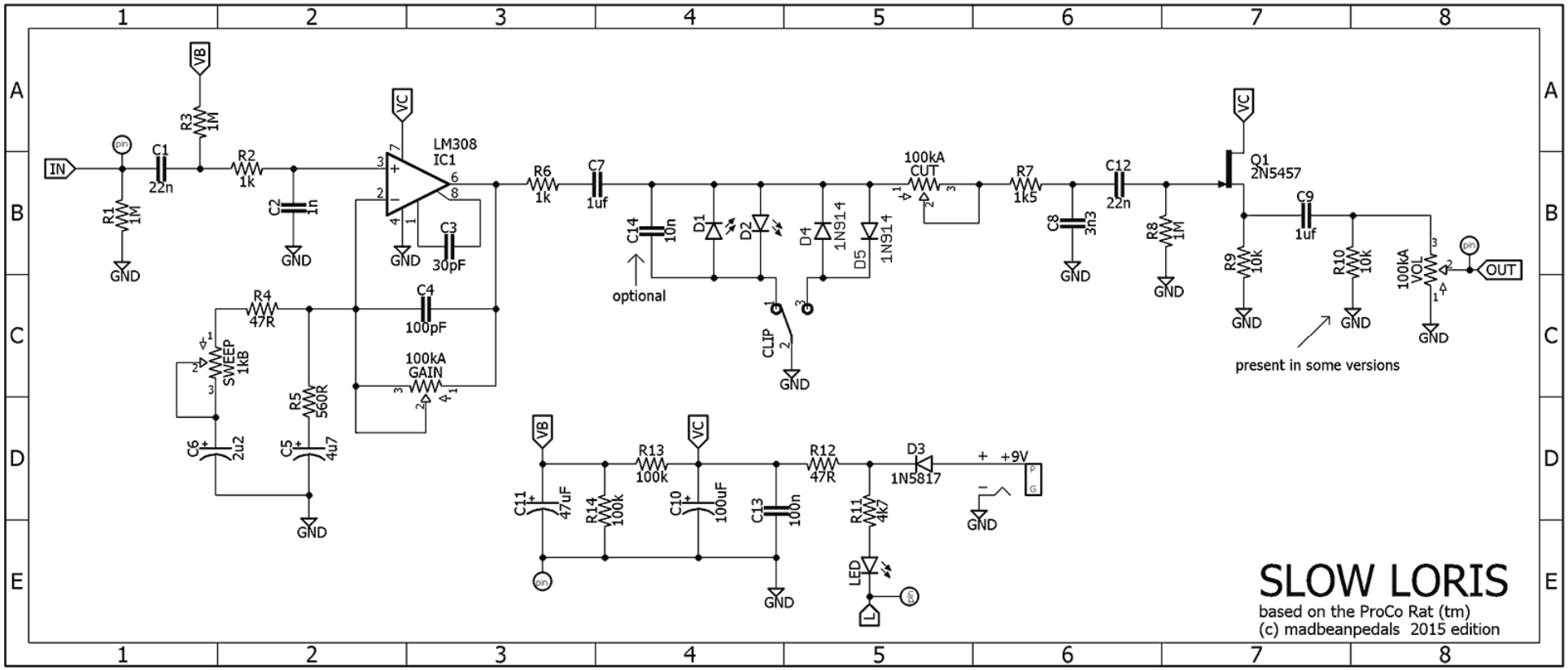
IN
R1 1M
C1 22n
R3 1M
VB
R2 1k
C2 1n
GND
VC
LM308
IC1
C3 30pF
R4 47R
C4 100pF
100kA GAIN
SWEEP 1kB
R5 560R
C6 2u2
C5 4u7
R6 1k
C7 1uf
C14 10n
optional
D1
D2
D4 1N914
D5 1N914
CLIP
100kA CUT
R7 1k5
C8 3n3
C12 22n
R8 1M
Q1 2N5457
C9 1uf
R9 10k
R10 10k
100kA VOL
OUT
present in some versions
C11 47uF
R14 100k
R13 100k
C10 100uF
C13 100n
R12 47R
D3 1N5817
+9V
R11 4k7
LED
SLOW LORIS
based on the ProCo Rat (tm)
(c) madbeanpedals 2015 edition

Wiring Diagram

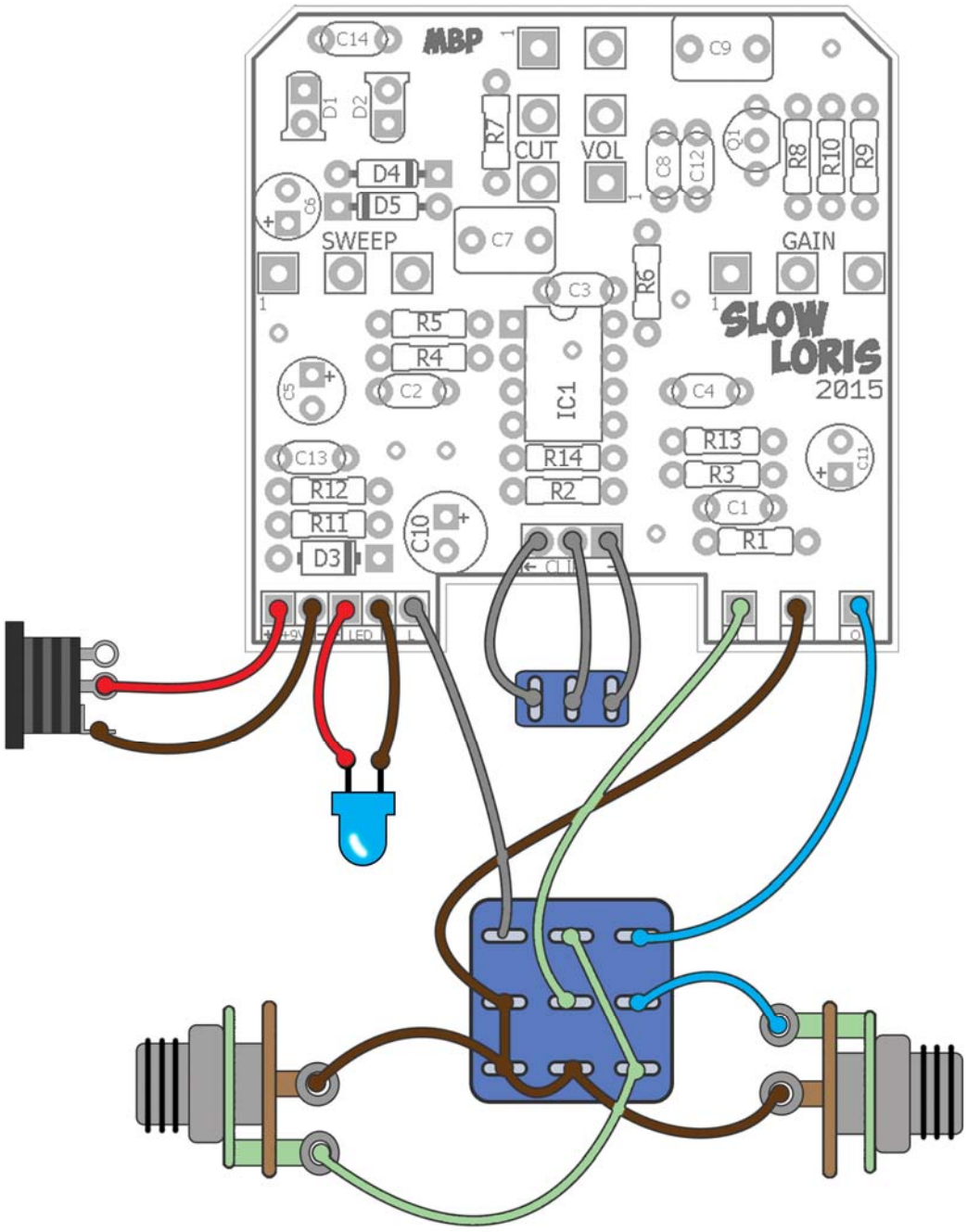

1590B Drill Template

4.44” W x 6.45” H

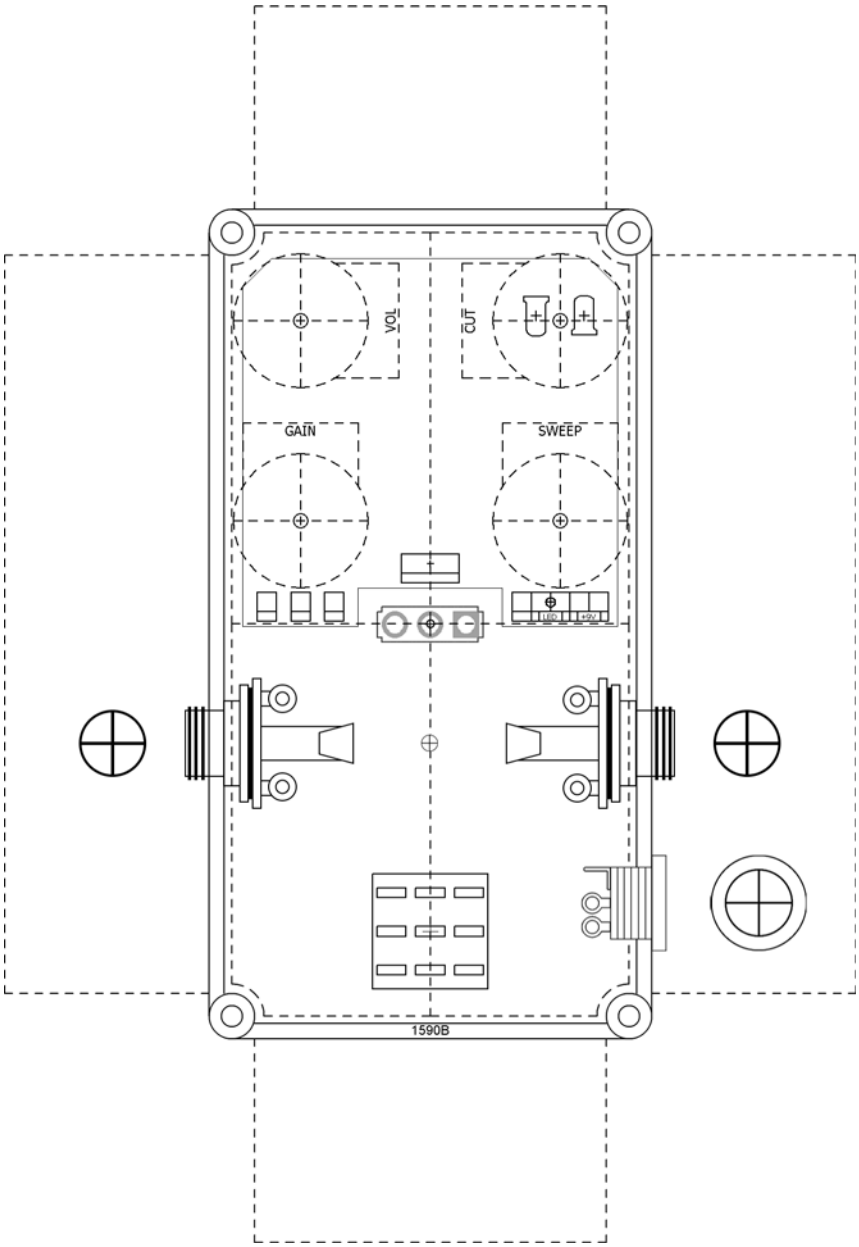

Photoshop Drill Template:
http://www.madbeanpedals.com/projects/SlowLoris/docs/SlowLoris_DRILL.zip

Overview:

Much like the venerated Ibanez® Tube Screamer™ the Rat™ needs little introduction. It is part of the "holy trinity" of dirt pedals that nearly every rock guitar player has owned or played through at some point (the other being the Big Muff™). But, unlike the smooth and refined sound of the Tube Screamer™, the Rat™ is more like a distant uncle…you know, the one that always smells like stale cigars and bottom-of-the-well whiskey; rude, abrasive and sometimes just plain ol' mean.

While the Rat™ lacks smoothness (and pushes the boundaries on acceptable signal to noise ratio) it makes up for it with lots of character. It is a textured distortion; like putting a fine layer of gritty sand over your guitar tone. One can almost imagine ripping fat riffs while playing "Round and Round" at your local bar gig, flipping your long mane of hair while the ladies swoon over your tiger striped spandex. Well, maybe that's just me.

Anyway, the Slow Loris is a clone of the Rat™ with a couple extra mods. The first is an additional knob labeled "Sweep". This is a 1k pot in series with R4 (also known as the "Ruetz mod"). The Sweep pot lets you change the clipping frequency of the gain stage. It is most useful at lower gain settings and will darken up the tone a bit as you turn it up. Fully counter-clockwise is the stock Rat™ sound. The second mod is a switch that lets you select between the stock 1n914 clipping diodes and LED clipping. LEDs are louder and crunchy. The 2014 version of the Slow Loris added C14, which will help smooth out some of the high frequencies in LED clipping mode. C14 is optional.

Circuit Analysis:

- R1 is a pulldown resistor. It helps reduce popping when the effect is switched on.
- C1 is a coupling cap. It lets the AC guitar signal through while preventing the DC voltage the circuit uses from escaping back into the guitar.
- R3 is a biasing resistor for IC1. It connects to the biasing voltage supply (Vb) to provide the proper current to the op-amp for operation. It also sets the input impedance of the op-amp (R2 adds a very small amount to the total input impedance but can be ignored).
- R2 is a small signal limiting resistor at the non-inverted input of the op-amp. It also forms an LP filter with C2 centered at 159KHz to reduce RF interference.
- C3 is the "slew rate compensation capacitor". Slew is actually a bit more complicated to explain but the basic idea is it measures how quickly the op-amp reacts to voltage and/or frequency changes at its input. In many other op-amps, this is pre-determined, but in the LM308 it can be adjusted, or compensated, by an external capacitor. Here's a good read on the slew rate of the Rat™.
- C4 is a filtering cap used in the feedback loop of IC1. At high gain settings, it helps reduce high frequency noise.
- The Gain pot sets the overall distortion level from lowest to highest as it goes clockwise. It works in parallel with C4, so at low gain settings there is little filtering effect. At high gain settings, the resistance value of the Gain pot is high which creates an audible filter.
- R4 and R5 set the maximum amount of gain. The lower the values, the higher the gain. These resistors are in parallel, so their total value is equivalent to about 43R. However, they form different frequency cutoff ranges with the two caps. One is 1540Hz and the other is 60Hz. What this means is that frequencies below those ranges are clipped less, and vice versa. This filter combo probably has a lot to do with the "graininess" of the Rat™.
- The Sweep pot has already been explained, but note that at higher settings of the Sweep pot, the maximum gain of IC1 is reduced. This is because R4 and the 1k pot are additive, and we already know that high resistor values on either R4 or R5 will reduce the maximum gain of IC1. Additionally, that 1540Hz filter set by the 47R/2u2 combo becomes 69Hz at 1.047k/2u2. This is why the tone gets darker as the Sweep pot goes up.
- R6 is another signal limiting resistor. This is a common technique used on the outputs of op-amps to reduce noise.
- C7 is a coupling cap. It blocks the DC coming from IC1 while permitting the AC signal to pass onto the amp or next effect. The large value (1uF) means that all guitar frequencies will pass.
- D1, D2, D4 and D5 are the clipping diodes. These diodes clip the AC signal corresponding to their forward voltage drop. High forward voltages means the signal is clipped less and vice versa. This is why the LEDs are louder…they have a higher forward voltage than the 1n914. Since our DC is sitting at 0v, these diodes are connected to ground (without C7, they would have to be connected to the Vb supply to perform the clipping operation). C10 is an additional smoothing cap used only with the LED clippers.
- The tone section of the Slow Loris is comprised of the Cut knob, R7 and C8. This forms a passive LP filter which is variable from bright to dark. At full counter-clockwise, the series resistance of the Cut knob is 0, and the filter reduces to R7/C8 which centers around 32KHz: well above human hearing range. When the Cut knob is turned up, the series resistance increases so that we are left with 101.5k/3n3 when it is full clockwise. This filter then centers around 475Hz. This gives the tone knob a very large range of frequency cutting. You could shift it further down the frequency spectrum simply by increasing the value of 3n3. This would be useful when using the Slow Loris for bass guitar.
- C12 is a coupling cap between the tone and output buffer section. It also forms a very low HP filter with the R8 resistor.

- R8, Q1 and R9 form the output buffer, which is used to compensate for signal loss due to the passive tone filter in the previous section. R8 sets the input impedance of Q1 and serves to bias the gate of the 2n5457. *Side note: in previous versions of the Slow Loris, this was connected to the Vb supply. Either way works the same, but most schematics of the Rat™ have this resistor connected to ground, so the change was made to keep it true to the original.* R9 sets the output impedance of the buffer. The value here is not too critical. It needs to be large enough so that the source of Q1 is not connected to ground, but not too large. I'm sure there is a better explanation of that.
- C9 is out final coupling cap. It restores our AC signal to deliver it to the amp, or next effect. The value here is large so that all frequencies pass.
- R10 was included because I saw it on at least one Rat™ schematic. **I don't know how prevalent this resistor was over the history of the pedal, and I've never used it.** But, it was included nonetheless to be as accurate as possible. I suggest leaving it off. Its function seems to be to set the output impedance of the circuit, but is superfluous since our Volume pot already does this. In fact, it will reduce the total volume output of the circuit since it is in parallel with the volume pot: another reason to leave it off.
- Our Volume pot sets the total output of the circuit via a voltage divider. At full counter clockwise, it pulls the output to ground, i.e. no output. At full clockwise it delivers the full output.
- R11 is the current limiting resistor for the LED indicator used on the bypass switch. 4k7 is standard, but other values will work. Higher values result in a less bright LED.
- D3 is used for reverse polarity protection. This prevents inebriated rockers from connecting a positive tip DC supply to our Slow Loris and destroying it. The 1n5817 is used here due to its low voltage drop.
- R12 is a series resistor used to reduce noise on our power supply. It forms a filter network with C10 and C13.
- C10 and C13 are used for smoothing out our power supply signal. The 100uF stores plenty of charge to deliver to our effect consistently. The 100n is used in parallel to reduce any DC ripple coming from our power supply.
- Finally, R13, and R14 form a voltage divider to create our bias supply voltage. Since they are equal value the incoming 9v voltage is reduced by half to 4.5v. The high values used here (100k) also reduce the total current available for the biasing resistors used in our circuit. C11 completes the circuit and keeps charged up to keep the Vb supply constant.