SAWSE

FX TYPE: Filter

Based on the DOD® 440™

© 2016 madbeanpedals

1.7” W x 1.775” H

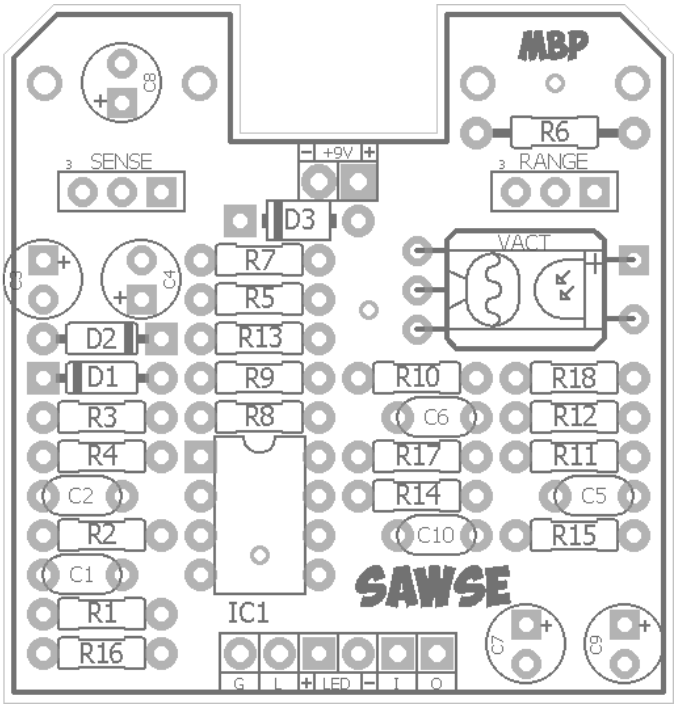

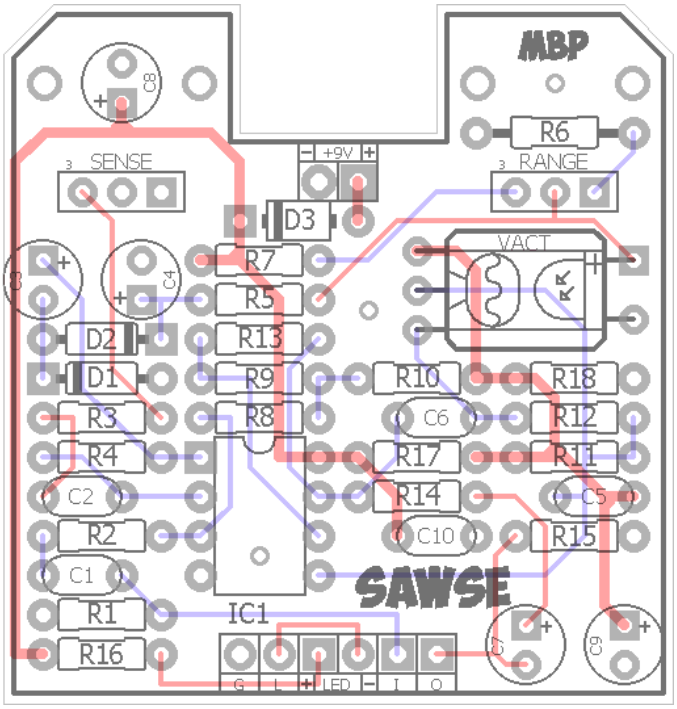

Terms of Use: *You are free to use purchased circuit boards for both DIY and small commercial operations. You may not offer these PCBs for resale or as part of a “kit” in a commercial fashion. Peer to peer re-sale is, of course, okay.*

B.O.M.

Resistors		Caps		Diodes	
R1	1M	C1	10n	D1	1n914
R2	10k	C2	100n	D2	1n914
R3	4k7	C3	4u7	D3	1N5817
R4	470k	C4	1uF	**IC**	
R5	6k8	C5	22n	IC1	TL022
R6	22k	C6	22n	**Vactrol**	
R7	100k	C7	1uF	VACT	VTL5C4/2
R8	100k	C8	47uF	**Pots**	
R9	220k	C9	10uF	RANGE	100kB
R10	100k	C10	100n	SENSE	100kC
R11	220k				
R12	220k				
R13	430k				
R14	470R				
R15	100k				
R16	4k7				
R17	22k				
R18	22k				

Shopping List

Value	QTY	Type	Rating
470R	1	Metal / Carbon Film	1/4W
4k7	2	Metal / Carbon Film	1/4W
6k8	1	Metal / Carbon Film	1/4W
10k	1	Metal / Carbon Film	1/4W
22k	3	Metal / Carbon Film	1/4W
100k	4	Metal / Carbon Film	1/4W
220k	3	Metal / Carbon Film	1/4W
430k	1	Metal / Carbon Film	1/4W
470k	1	Metal / Carbon Film	1/4W
1M	1	Metal / Carbon Film	1/4W
10n	1	Film	16v min.
22n	2	Film	16v min.
100n	2	Film	16v min.
1uF	2	Electrolytic	16v min.
4u7	1	Electrolytic	16v min.
10uF	1	Electrolytic	16v min.
47uF	1	Electrolytic	16v min.
1n914	2		
1N5817	1		
TL022	1	or, 4558	
VTL5C4/2	1		
100kB	1	PCB Right Angle, Metal Shaft	9mm
100kC	1	PCB Right Angle, Metal Shaft	9mm

1590G Drill Guide

3.66”W x 5.63”H

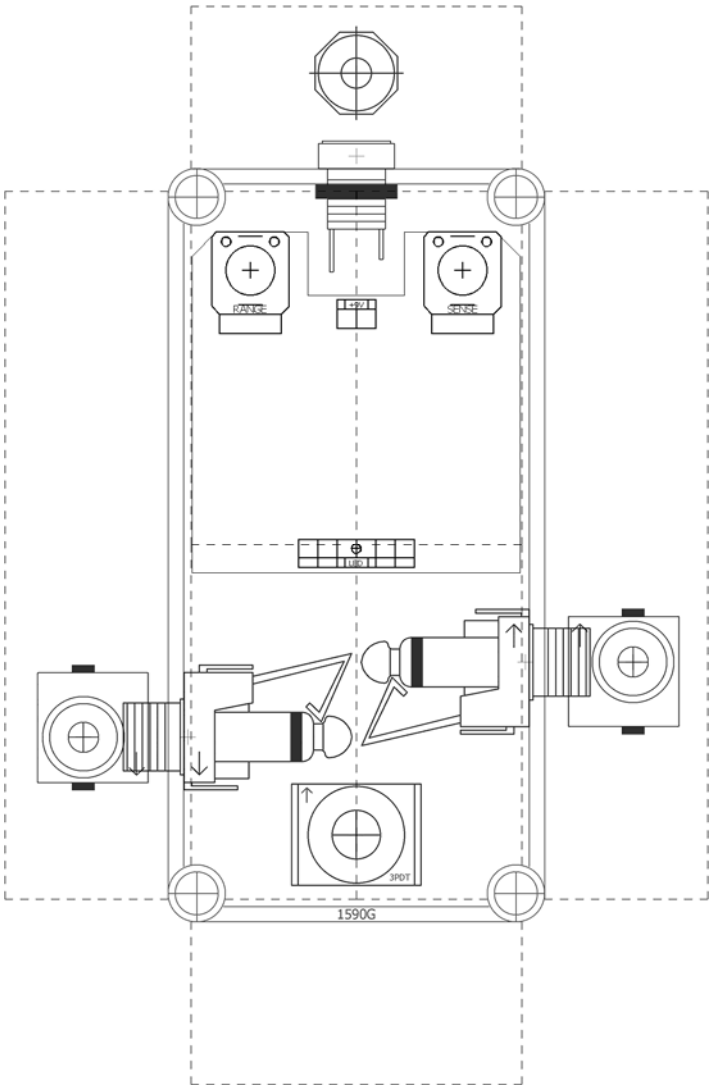

Indicator LED can be mounted directly to the PCB. Drill spot is directly above the “LED” text.

Photoshop Drill Guide: http://www.madbeanpedals.com/projects/1590G/DrillGuides

Overview

The Sawse is based on the venerable DOD 440 envelope filter.

Controls

- **Sense:** Controls the sensitivity of the envelope to pick attack.
- **Range:** The range of frequencies over which the envelope operates.

Notes

If you cannot get the 430k resistor, use a 100k and 330k in series.

The TL022 is spec'd in the original design but a 4558 works very well too (this is what I used in my build).

The VTL5C4/2 is essential for making this project work correctly (the 5C3/2 will not work for this circuit). Unfortunately, it looks like they are no longer being made and are extremely scarce. I purchased mine just a few months ago from Smallbear but they apparently no longer stock them. There are a few left here:

http://www.alliedelec.com/excelitas-technologies-sensors-vtl5c4-2/70219700/

https://www.banzaimusic.com/Vactec-VTL5C4-2.html

Voltages

IC1	V
1	4.58
2	4.59
3	4.51
4	0
5	4.58
6	4.61
7	4.57
8	9.18

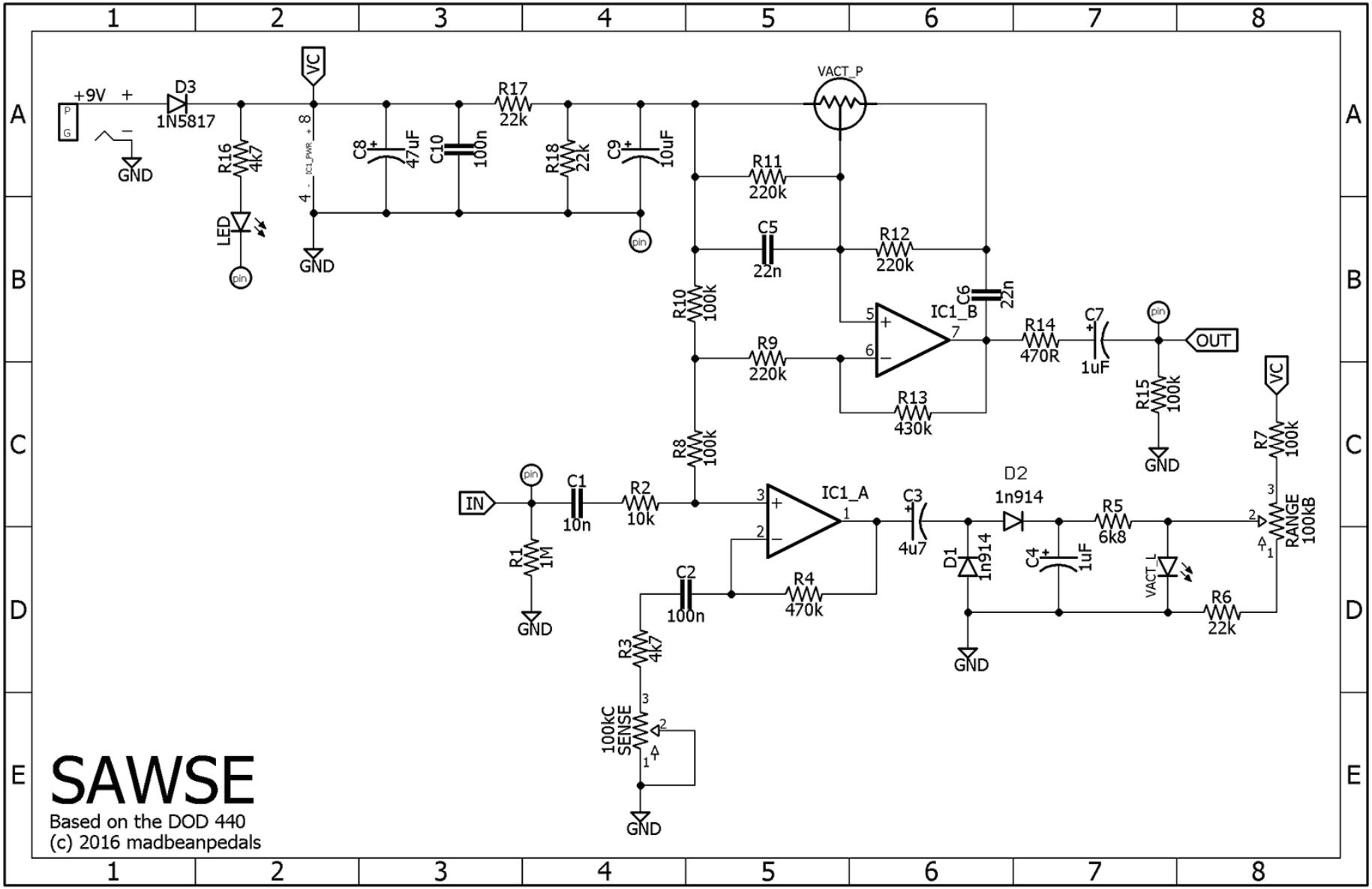
+9V
D3
1N5817
GND
R16
4k7
LED
VC
IC1_PWR
GND
C8
47uF
C10
100n
R17
22k
R18
22k
C9
10uF
VACT_P
R11
220k
C5
22n
R12
220k
C6
22n
IC1_B
R14
470R
C7
1uF
OUT
R15
100k
GND
R10
100k
R9
220k
R13
430k
R8
100k
IN
C1
10n
R2
10k
IC1_A
C3
4u7
D2
1n914
R5
6k8
R7
100k
RANGE
100kB
R1
1M
GND
C2
100n
R4
470k
D1
1n914
C4
1uF
VACT_L
R6
22k
GND
R3
4k7
100kC
SENSE
GND
SAWSE
Based on the DOD 440
(c) 2016 madbeanpedals